Operator's Manual

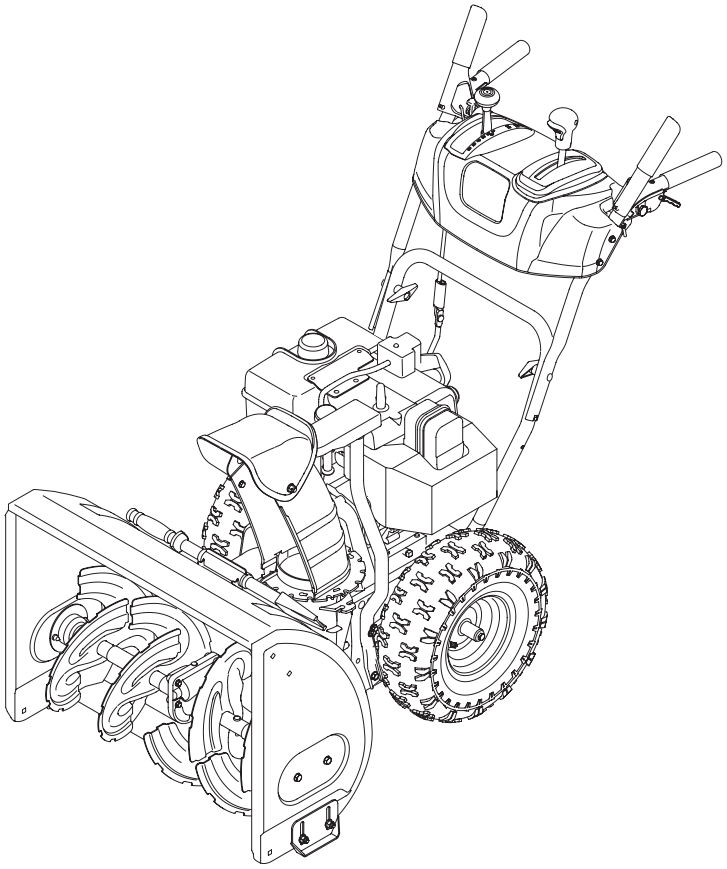

Two-Stage
Snow Thrower
Model 5ML

IMPORTANT: Read safety rules and instructions carefully before operating equipment.

Warning: This unit is equipped with an internal combustion engine and should not be used on or near any unimproved forest-covered, brush-covered or grass-covered land unless the engine's exhaust system is equipped with a spark arrester meeting applicable local or state laws (if any). If a spark arrester is used, it should be maintained in effective working order by the operator. In the State of California the above is required by law (Section 4442 of the California Public Resources Code). Other states may have similar laws. Federal laws apply on federal lands. A spark arrester for the muffler is available through your nearest engine authorized service dealer or contact the service department, P.O. Box 361131 Cleveland, Ohio 44136-0019.

MTD LLC, P.O. BOX 361131 CLEVELAND, OHIO 44136-0019

Printed in U.S.A.

FORM NO. 769-01309B
(7/30/2004)

TABLE OF CONTENTS

Content	Page	Content	Page
Customer Support	2	Service & Adjustments	14
Important Safe Operation Practices	3	Off-Season Storage	18
Setting Up Your Snow Thrower	5	Troubleshooting	19
Operating Your Snow Thrower	8	Illustrated Parts List	20
Maintaining Your Snow Thrower	12	Warranty	Back Cover

FINDING MODEL NUMBER

This Operator's Manual is an important part of your new snow thrower. It will help you assemble, prepare and maintain the unit for best performance. Please read and understand what it says.



Before you start assembling your new equipment, please locate the model plate on the equipment and copy the information from it in the space provided below. You can locate the model plate by standing at the operating position and looking down at the rear of the snow thrower. A sample model plate is also given below. This information will be necessary to use the manufacturer's web site and/or help from the Customer Support Department or an authorized service dealer.



Copy the model number here: _____

Copy the serial number here: _____

CUSTOMER SUPPORT

Please do NOT return the unit to the retailer from where it was purchased, without first contacting Customer Support.

If you have difficulty assembling this product or have any questions regarding the controls, operation or maintenance of this unit, you can seek help from the experts. Choose from the options below:



Visit **mtdproducts.com** for many useful suggestions. Click on Customer Support button and you will get the four options reproduced here. Click on the appropriate button and help is immediately available.

The answer you are looking for could be just a mouse click away!

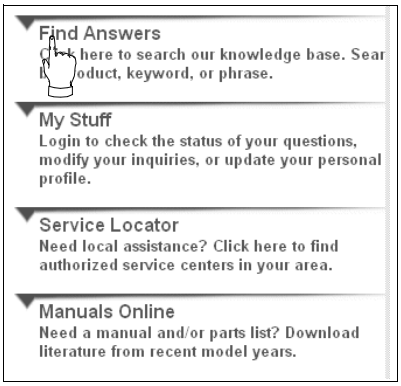

The answer you are looking for could be just a mouse click away!

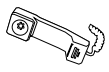

To reach the Customer Support Line, please call **1-800-800-7310**.



The **engine** manufacturer is responsible for all engine-related issues with regards to performance, power-rating, specifications, warranty and service. Please refer to the engine manufacturer's Owner's/Operator's Manual, packed separately with your unit, for more information.

SECTION 1: IMPORTANT SAFE OPERATIONS PRACTICES

WARNING: This symbol points out important safety instructions which, if not followed, could endanger the personal safety and/or property of yourself and others. Read and follow all instructions in this manual before attempting to operate this machine. Failure to comply with these instructions may result in personal injury. When you see this symbol—**heed its warning**.

WARNING: Engine Exhaust, some of its constituents, and certain vehicle components contain or emit chemicals known to State of California to cause cancer and birth defects or other reproductive harm.

DANGER: This machine was built to be operated according to the rules for safe operation in this manual. As with any type of power equipment, carelessness or error on the part of the operator can result in serious injury. This machine is capable of amputating hands and feet and throwing objects. Failure to observe the following safety instructions could result in serious injury or death.

Training

1. Read, understand, and follow all instructions on the machine and in the manual(s) before attempting to assemble and operate. Keep this manual in a safe place for future and regular reference and for ordering replacement parts.
2. Be familiar with all controls and their operation. Know how to stop the machine and disengage controls.
3. Never allow children under 14 years old to operate this machine. Children 14 years old and over should read and understand the operation instructions and safety rules in this manual and should be trained and supervised by a parent.
4. Never allow adults to operate this machine without proper instruction.
5. Thrown objects can cause serious personal injury. Plan your snow-throwing pattern to avoid discharge of material toward roads, bystanders and the like.
6. Keep bystanders, helpers, pets and children at least 75 feet from the machine while it is in operation. Stop machine if anyone enters the area.
7. Exercise caution to avoid slipping or falling, especially when operating in reverse.

Preparation

1. Thoroughly inspect the area where the equipment is to be used. Remove all doormats, newspapers, sleds, boards, wires and other foreign objects, which could be tripped over or thrown by the auger/ impeller.
2. Always wear safety glasses or eye shields during operation and while performing an adjustment or repair to protect your eyes. Thrown objects which ricochet can cause serious injury to the eyes.
3. Do not operate without wearing adequate winter outer garments. Do not wear jewelry, long scarves or other loose clothing, which could become entangled in moving parts. Wear footwear which will improve footing on slippery surfaces.
4. Use a grounded three-wire extension cord and receptacle for all units with electric start engines.
5. Adjust collector housing height to clear gravel or crushed rock surfaces.
6. Disengage all controls before starting the engine.
7. Never attempt to make any adjustments while engine is running, except where specifically recommended in the operator's manual.
8. Let engine and machine adjust to outdoor temperature before starting to clear snow.
9. To avoid personal injury or property damage use extreme care in handling gasoline. Gasoline is extremely flammable and the vapors are explosive. Serious personal injury can occur when gasoline is spilled on yourself or your clothes, which can ignite. Wash your skin and change clothes immediately.
    a. Use only an approved gasoline container.
    b. Extinguish all cigarettes, cigars, pipes and other sources of ignition.
    c. Never fuel machine indoors.
    d. Never remove gas cap or add fuel while the engine is hot or running.
    e. Allow engine to cool at least two minutes before refueling.
    f. Never over fill fuel tank. Fill tank to no more than ½ inch below bottom of filler neck to provide space for fuel expansion.
    g. Replace gasoline cap and tighten securely.
    h. If gasoline is spilled, wipe it off the engine and equipment. Move machine to another area. Wait 5 minutes before starting the engine.
    i. Never store the machine or fuel container inside where there is an open flame, spark or pilot light (e.g. furnace, water heater, space heater, clothes dryer etc.).
    j. Allow unit to cool for 5 minutes before storing.

Operation

1. Do not put hands or feet near rotating parts, in the auger/impeller housing or chute assembly. Contact with rotating parts can amputate hands and feet.
2. The auger/impeller control is a safety device. Never bypass its operation. Doing so makes the machine unsafe and may cause personal injury.
3. The controls must operate easily in both directions and automatically return to the disengaged position when released.
4. Never operate with a missing or damaged chute assembly. Keep all safety devices in place and working.
5. Never run an engine indoors or in a poorly ventilated area. Engine exhaust contains carbon monoxide, an odorless and deadly gas.
6. Do not operate machine while under the influence of alcohol or drugs.
7. Muffler and engine become hot and can cause a burn. Do not touch.
8. Exercise extreme caution when operating on or crossing gravel surfaces. Stay alert for hidden hazards or traffic.
9. Exercise caution when changing direction and while operating on slopes.
10. Plan your snow-throwing pattern to avoid discharge towards windows, walls, cars etc. Thus, avoiding possible property damage or personal injury caused by a ricochet.
11. Never direct discharge at children, bystanders and pets or allow anyone in front of the machine.
12. Do not overload machine capacity by attempting to clear snow at too fast of a rate.
13. Never operate this machine without good visibility or light. Always be sure of your footing and keep a firm hold on the handles. Walk, never run.
14. Disengage power to the auger/impeller when transporting or not in use.
15. Never operate machine at high transport speeds on slippery surfaces. Look down and behind and use care when in reverse.
16. If the machine should start to vibrate abnormally, stop the engine, disconnect the spark plug wire and ground it against the engine. Inspect thoroughly for damage. Repair any damage before starting and operating.
17. Disengage all controls and stop engine before you leave the operating position (behind the handles). Wait until the auger/impeller comes to a complete stop before unclogging the chute assembly, making any adjustments, or inspections.
18. Never put your hand in the discharge or collector openings. Always use the clean-out tool provided to unclog the discharge opening. Do not unclog chute assembly while engine is running. Before unclogging, shut off engine and remain behind handles until all moving parts have stopped completely.
19. Use only attachments and accessories approved by the manufacturer (e.g. wheel weights, tire chains, cabs etc.).
20. If situations occur which are not covered in this manual, use care and good judgment. Contact your dealer or telephone **1-800-800-7310** for assistance and the name of your nearest servicing dealer.

Maintenance & Storage

1. Never tamper with safety devices. Check their proper operation regularly. Refer to the maintenance and adjustment sections of this manual.
2. Before cleaning, repairing, or inspecting machine disengage all controls and stop engine. Wait until the auger/impeller come to a complete stop. Disconnect the spark plug wire and ground against the engine to prevent unintended starting.
3. Check bolts and screws for proper tightness at frequent intervals to keep the machine in safe working condition. Also, visually inspect machine for any damage.
4. Do not change the engine governor setting or over-speed the engine. The governor controls the maximum safe operating speed of the engine.
5. Snow thrower shave plates and skid shoes are subject to wear and damage. For your safety protection, frequently check all components and replace with original equipment manufacturer's (OEM) parts only. "Use of parts which do not meet the original equipment specifications may lead to improper performance and compromise safety!"
6. Check controls periodically to verify they engage and disengage properly and adjust, if necessary. Refer to the adjustment section in this operator's manual for instructions.
7. Maintain/replace safety/instruction labels, as necessary.
8. Observe proper disposal laws and regulations for gas, oil, etc. to protect the environment.
9. Prior to storing, run machine a few minutes to clear snow from machine and prevent freeze up of auger/impeller.
10. Never store the machine or fuel container inside where there is an open flame, spark or pilot light such as a water heater, furnace, clothes dryer etc.
11. Always refer to the operator's manual for proper instructions on off-season storage.

Your Responsibility

Restrict the use of this power machine to persons who read, understand and follow the warnings and instructions in this manual and on the machine.

SECTION 1: SETTING UP YOUR SNOW THROWER

IMPORTANT: This unit is shipped with the engine full of oil. After assembly, see page 9 for fuel and oil details.

Removing From Carton

1. Cut the corners of the carton and lay the sides flat on the ground. Remove all packing inserts.
2. Move the snow thrower out of the carton.
3. Make certain the carton has been completely emptied before discarding it.

Loose Parts

Your snow thrower has been assembled at the factory except the parts shipped loose in the carton. These are listed below.

a. Shear Pins and Cotter Pins
b. Sta-Bil® Fuel Stabilizer (1 oz Package)

Before Assembly

Disconnect spark plug wire and ground it against the engine to prevent unintended starting.

NOTE: *All references in this manual to the left or right side of the snow thrower is from the operating position only. Exceptions, if any, will be specified.*

Setting up the Snow Thrower

1. Raise the upper handle assembly in the direction shown in Figure 1. Align the upper handle with the lower handles.

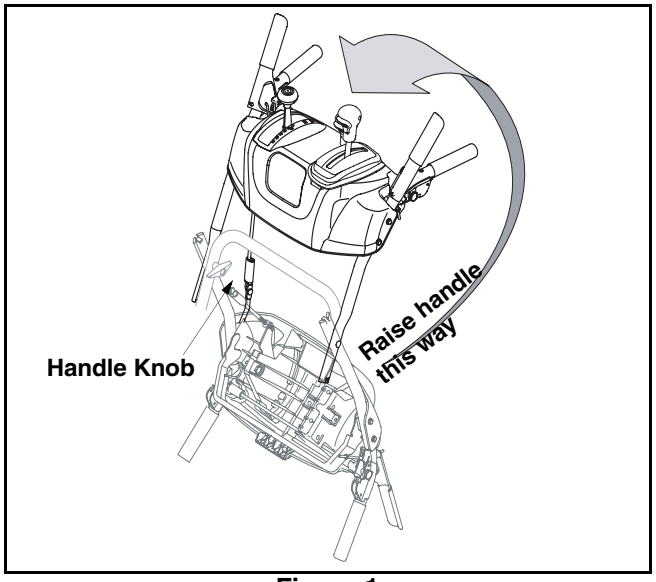

Figure 1

2. Tighten two handle knobs firmly to secure the upper handle to the lower handles. See Figure 1.
3. Slide the shift rod connector down over the end of the lower shift rod. Tap the connector until it **locks** over the lower shift rod. See Figure 2.

NOTE: *If the connector is not properly assembled, the shift rod will pivot and changing speed or direction of the snow thrower will not be possible.*

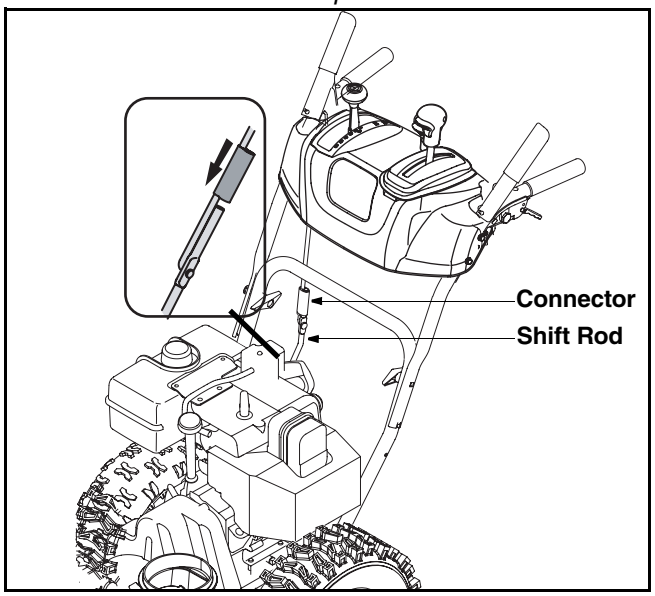

Figure 2

4. Make sure that the flange keepers are opened. Position the chute assembly (forward-facing) over the chute base. See Figure 3A.
5. Close the flange keepers to secure the chute assembly to the chute adapter. The flange keepers will click into place when properly secure. See Figure 3B.

NOTE: *If the flange keepers do not easily click into place, use the palm of your hand to apply swift, firm pressure to the back of each.*

6. Pull the hairpin clip out of the clevis pin on the chute support rod. Save these hardware.

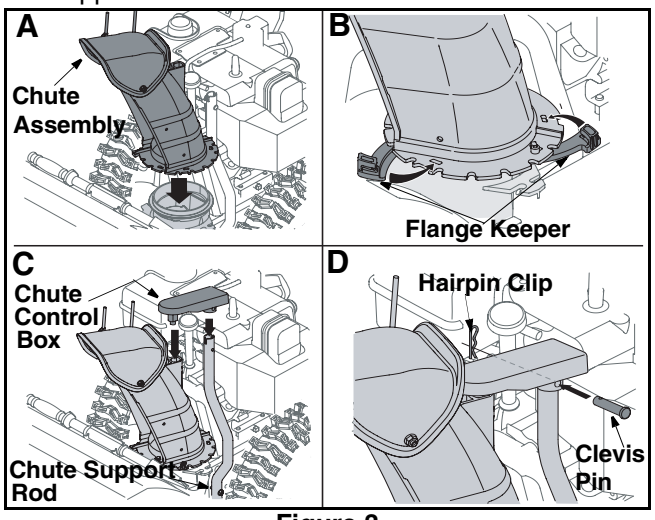

Figure 3

7. Insert the round end of the chute control box on the short tube of the chute assembly as shown in Figure 3C.
8. Insert other end of the chute control box into the chute support tube as shown in Figure 3C.
9. Insert the clevis pin, earlier removed, through the holes on the chute control box and chute support rod. Secure with the hairpin clip. See Figure 3D.
10. Slip the cables, running from the handle panel to the chute, into the cable guide located on top of the engine. See Figure 4 .
11. Slip the cables, running from the handle panel to the chute control box, into the cable guide too. See Figure 4.

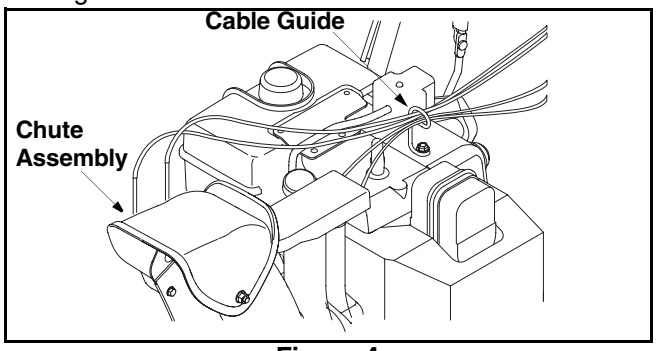

Figure 4

12. The extension cord is fastened with a cable tie to the rear of the auger housing for shipping purposes. Cut the cable tie and remove it before operating the snow thrower.

Final Adjustments

After setting up your snow thrower, check the adjustments as instructed below and make any final adjustments necessary **before** operating the unit.

CAUTION: Perform the following test before operating the snow thrower for the first time and at the start of each winter season. Failure to comply with these adjustment instructions may cause damage to the unit.

Auger Control Test

1. To check the adjustment of the auger control, push forward the left hand control until the rubber bumper is compressed. There should be slack in the cable.
2. Release the control. The cable should be straight. Make certain you can depress the auger control against the left handle completely.

WARNING: Do not over-tighten the cable. Over-tightening may prevent the auger from disengaging and compromise the safety of the snow thrower.

3. In a well-ventilated area, start the snow thrower engine as instructed earlier in this section under the heading **Starting Engine**. Make sure the throttle is set in the FAST position.
4. While standing in the operator's position (behind the snow thrower) engage the auger.
5. Allow the auger to remain engaged for approximately ten (10) seconds before releasing the auger control. Repeat this several times.
6. With the engine running in the FAST position and the auger control in the disengaged "up" position, walk to the front of the machine.
7. Confirm that the auger has completely stopped rotating and shows NO signs of motion.

IMPORTANT: If the auger shows ANY signs of rotating, immediately return to the operator's position and shut off the engine. Wait for all moving parts to stop before readjusting the auger control cable.

8. If adjustment is necessary, loosen the jam nut and thread the cable in (for less slack) or out (for more slack). See Figure 5.
9. Recheck the adjustment. Tighten jam nut against the cable when correct adjustment is reached.

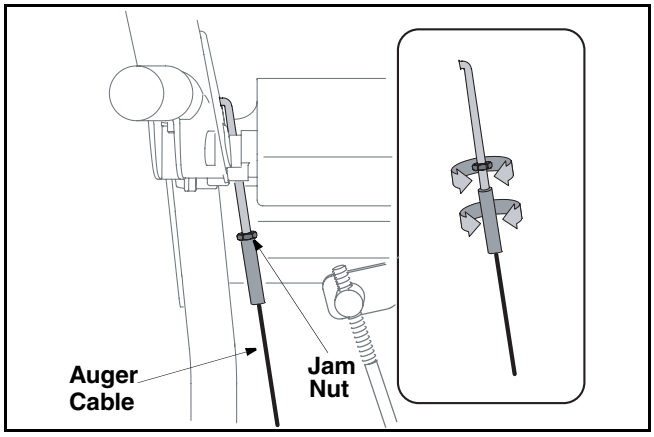

Figure 5

Drive Control & Shift Lever

1. Tip the snow thrower forward so that it rests on the auger housing.
2. Move the shift lever all the way forward to the sixth (6) position.
3. With the drive control released, spin the snow thrower wheels by hand. The wheels should turn; however, you may feel some resistance.
4. Engage the drive control. The wheels should no longer turn.
5. Now release the drive control and spin the wheels again.
6. Move the shift lever back to the fast reverse position and then all the way forward again. There should be no resistance in the shift lever and the wheels should turn.
7. If you face resistance when moving the shift lever or the wheels stop when they should not, loosen the jam nut on the drive cable and unthread the cable one turn.

8. If the wheels can still be turned when you engage the drive control, loosen the jam nut on the drive cable and thread the cable in one turn. Recheck the adjustment and repeat if needed.
9. Tighten the jam nut to secure the cable when correct adjustment is reached.

NOTE: *For further details, refer to the Adjustment section on page 17.*

Shear Pin Storage

An area for convenient shear pin storage is located under the plastic dash panel. See Figure 6.

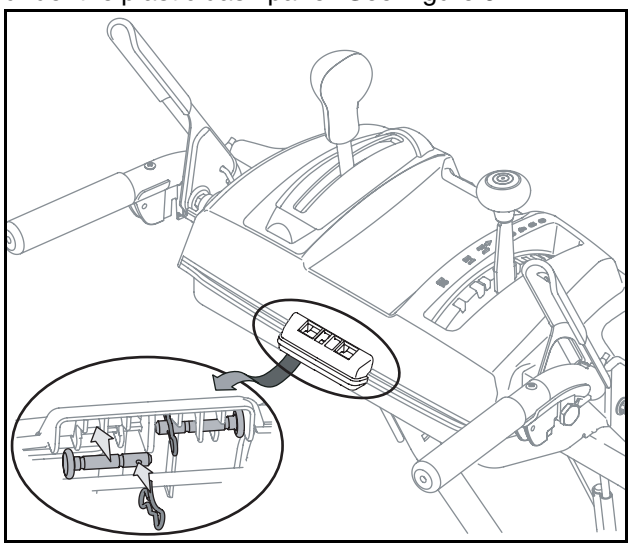

Figure 6

Skid Shoe

Locate the shave plate and the skid shoes in Figure 8 on page 8. The space between this shave plate and the ground can be adjusted. For close snow removal, place skid shoes in the low position. Use middle or high position when area to be cleared is uneven.

IMPORTANT: It is not recommended that you operate this snow thrower on gravel as loose gravel can be easily picked up and thrown by the auger causing personal injury or damage to the snow thrower.

If for some reason, you have to operate the snow thrower on gravel, keep the skid shoe in the highest position for maximum clearance between the ground and the shave plate.

1. Adjust skid shoes by loosening the four lock nuts and carriage bolts and moving skid shoes to desired position. See Figure 7.
2. Make certain the entire bottom surface of skid shoes are against the ground to avoid uneven wear on the skid shoes.
3. Tighten nuts and bolts securely.

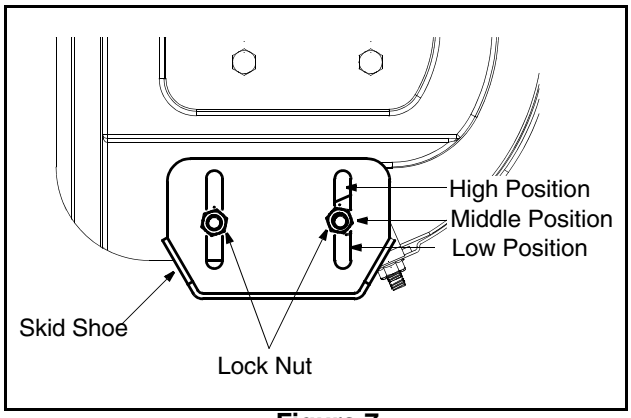

Figure 7

Tire Pressure (Pneumatic Tires)

The tires are over-inflated for shipping purposes. Check the tire pressure before operating the snow thrower. Refer to the tire side wall for tire manufacturer's recommended psi and deflate (or inflate) the tires as necessary.

NOTE: *If the tire pressure is not equal in both tires, the unit may pull to one side or the other and the shave plate will not sit level on the ground.*

WARNING: Under any circumstance do not exceed manufacturer's recommended psi. Equal tire pressure should be maintained at all times. Excessive pressure when seating beads may cause tire/rim assembly to burst with force sufficient to cause serious injury. Refer to sidewall of tire for recommended pressure.

Four-Way Chute Control™

The chute control lever may need to be lubricated to reduce its break-in period. Vegetable oil, petroleum jelly or motor oil can be used as lubricant.

IMPORTANT: This unit is shipped with engine oil in the engine, but without gasoline. After assembly, see OPERATION section of this manual for fuel selection and fill-up.

SECTION 2: OPERATING YOUR SNOW THROWER

Know The Controls

Read this owner's manual and safety rules before operating your snow thrower. Compare Figure 8 with your snow thrower to familiarize yourself with the location of various controls and adjustments. Maintain safety while learning about the controls and operating the unit. Save this manual for future reference.

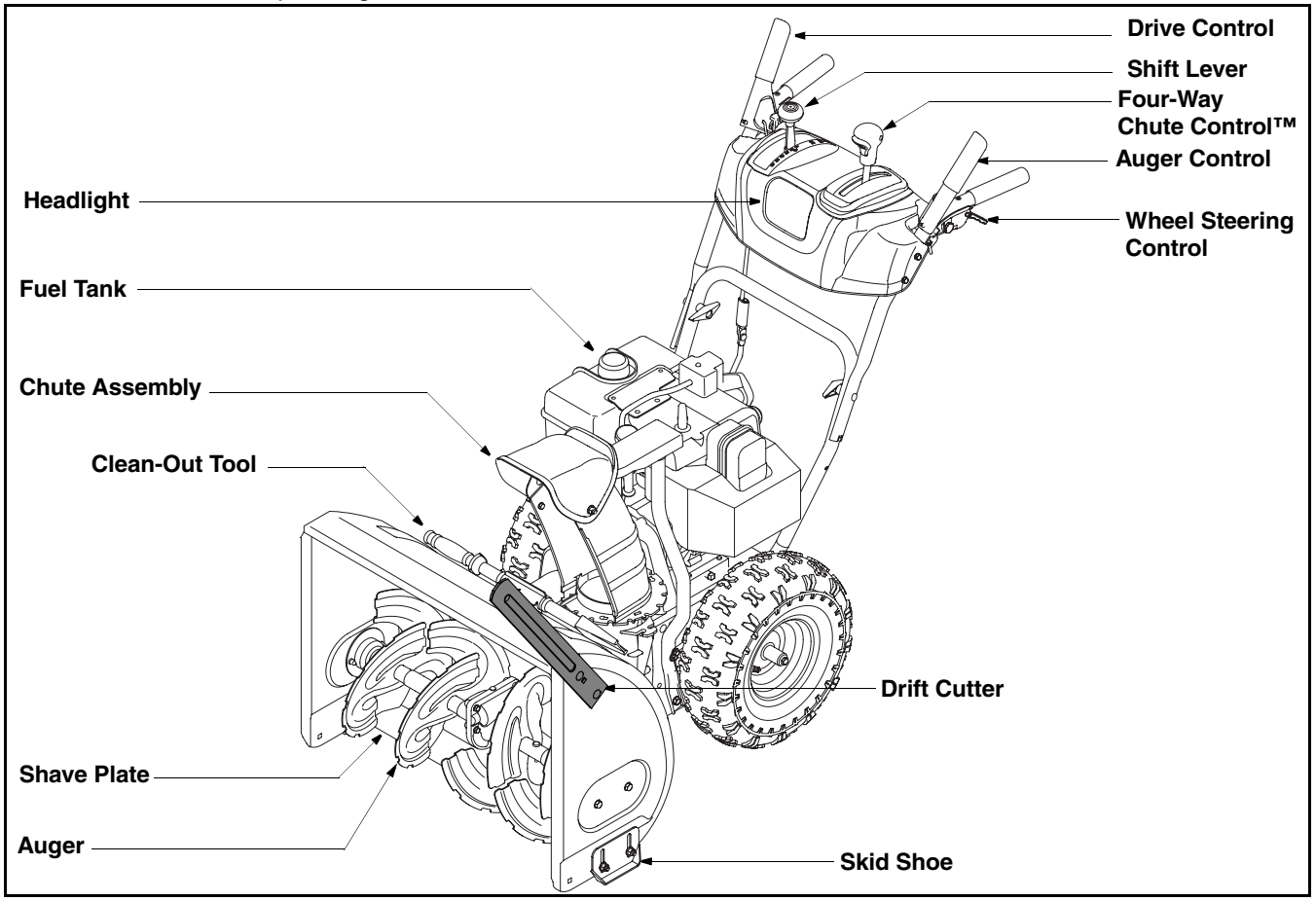

Figure 8

Drive Control/ Auger Control Lock

The drive control is located on the right handle. Squeeze down the drive control to engage the wheel drive. Release to stop.

The drive control also locks the auger control so you can operate the chute directional control without interrupting the snow throwing process. If the auger control is engaged simultaneously with the drive control, the operator can release the auger control (on the left handle) and the augers will remain engaged. Release both controls to stop the augers and wheel drive.

IMPORTANT: Always release the drive control before changing speeds.

Drift Cutters (If Equipped)

Drift cutters should be used when operating the snow thrower in heavy drift conditions.

Auger Control

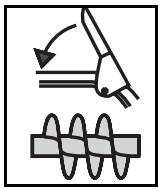

The auger control is located on the left handle. Squeeze the auger control to engage the augers. Release to stop the snow throwing action. The drive control must also be released in order to stop the auger.

IMPORTANT: Refer to **Auger Control Test** on page 6 prior to operating your snow thrower. Read and follow all instructions carefully and perform all adjustments to verify your snow thrower is operating safely and properly.

Ignition Key

The ignition key must be inserted and snapped in place in order for the engine to start. Remove the ignition key to prevent unauthorized use of equipment. Do NOT attempt to turn the key.

Four- Way Chute Control™

This four-way control lever is meant to control the direction and distance of snow discharge from the chute. Press the button on the knob and turn it left or right to rotate the chute to the *direction* that snow will be thrown. Tilt the lever forward to decrease the *distance* snow will be thrown, and backwards to increase distance.

Shift Lever

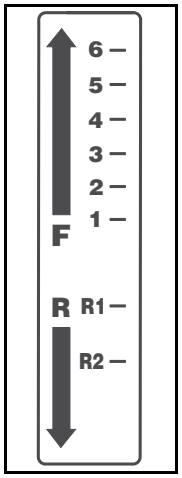

The shift lever is located in the center of the handle panel and is used to determine ground speed and direction of travel. It can be moved into any of eight positions.

IMPORTANT: Always release drive control before changing speeds.

Forward: Your snow thrower has six forward (F) speeds, with position number one (1) being the slowest speed.

Reverse: Your snow thrower has two reverse (R) speeds, with position number one (1) being the slower speed.

Headlight

The headlight is on whenever the engine is running.

Clean-Out Tool

The clean-out tool is designed to clear a clogged chute. Refer to page 11 for instructions on how to properly use it.

WARNING: Never use your hand to clear a clogged chute. Shut off engine and remain behind handles until all moving parts have stopped before unclogging.Use the clean-out tool or a stick to unclog.

Wheel Steering Control

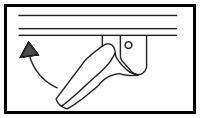

The left and right wheel steering controls are located on the underside of the handles. Squeeze the right control to turn right; squeeze the left control to turn left.

Skid Shoe

The skid shoe position is determined by the condition of the ground from where snow has to be removed. Higher the snow level, lower will be the skid shoe level. Adjust it accordingly. Refer to **Skid Shoe Adjustment** on page 7.

Before Starting Engine

Oil

The engine was shipped with oil in the engine. Check oil level before each operation to ensure adequate oil in the engine. Refer to instructions on page 13.

Gas

WARNING: Gasoline is flammable; use caution when handling or storing it.

WARNING: Do not fill fuel tank while the snow thrower is running, when it is hot or when it is in an enclosed area.

WARNING: Keep your snow thrower away from any open flame or an electrical spark and do not smoke while filling the fuel tank.

1. Store gasoline in a clean, approved container and keep the cap in place on the container.
2. Make sure that the container from which you pour the gasoline is clean and free from rust or other foreign particles.
3. A plastic cap is provided inside the fuel fill opening to protect the tank during manufacturing. Remove and discard. Use the threaded fuel tank cap to close after fill-up.
4. Always fill the fuel tank outdoors and use a funnel or spout to prevent spilling
5. Fill fuel tank with clean, fresh, unleaded grade automotive gasoline.
6. Never fill the fuel tank completely. Fill the tank to within 1/2" from the top to provide space for expansion of fuel.
7. Wipe off any spilled fuel before starting the engine.
8. At the end of the job, empty the fuel tank if the snow thrower is not going to be used for 30 days or longer. See off-season storage instructions on page 18.

To Start Engine

WARNING: Be sure **no one other than the operator** is standing near the snow thrower while starting or operating. **Do not operate** this snow thrower unless the chute assembly has been properly installed and is secured.

Electric Starter

Before starting, make sure that the engine has sufficient oil. The snow thrower engine is equipped with a 120 volt A.C. electric starter and recoil starter. The electric starter is equipped with a three-wire power cord and plug and is designed to operate on 120 volt AC household current. Follow all instructions carefully.

Cold Start

NOTE: *If the unit shows any sign of motion (drive or augers) with the clutch grips disengaged, shut the engine off immediately. Readjust as instructed in the "Final Adjustments" section of the Assembly Instructions.*

WARNING: The electric starter must be properly grounded at all times to avoid the possibility of electric shock which may be injurious to the operator.

1. Determine whether your house wiring is a three-wire grounded system. Ask a licensed electrician if you are not certain.

WARNING: If your house wiring system is not a three-wire grounded system, do not use this electric starter under any conditions.

- If your house wiring system is grounded and a three-hole receptacle is not available at the point the snow thrower starter will normally be used, one should be installed by a licensed electrician.
- When connecting the power cord, always connect cord to starter on engine first, then plug the other end into a three-hole grounded receptacle.
- When disconnecting the power cord, always unplug the end from the three-hole, grounded receptacle first.

2. **Attach** spark plug wire to spark plug.
3. Turn fuel valve on, if so equipped.
4. Make sure that the auger and drive controls are in the disengaged (up) position.
5. Move throttle control lever to FAST position.
6. Push key into the ignition slot and snap in place. *Do not turn key.*
7. Connect power cord to switch box on the engine.
8. Plug the other end of the power cord into a three-hole, grounded 120 volt A.C. receptacle.
9. Rotate choke knob to FULL choke position (cold engine start). If engine is warm, place choke in OFF position instead of FULL.
10. Push the primer three times.
11. Push down on the starter button until the engine starts. Do not crank for more than 10 seconds at a time. This electric starter is thermally protected. If overheated, it will stop automatically and can be restarted only when it has cooled to a safe temperature (a wait of 5 -10 minutes is required).
12. When the engine starts, release the starter button and slowly rotate the choke to OFF position. If the engine falters, rotate the choke to FULL and then gradually to OFF.
13. Disconnect the power cord from the receptacle first and then from the switch box on the engine.
14. Allow the engine to warm up for a few minutes because the engine will not develop full power until it reaches operating temperature. Operate the engine at full throttle (FAST) when throwing snow.

Recoil Starter

Make sure that the engine has sufficient oil and the auger and drive controls are released.

Cold Start

1. Move throttle control to FAST position.
2. Turn fuel valve on, if so equipped.
3. Push key into the ignition slot and snap in place. *Do not turn key.*
4. Rotate choke control to FULL choke position.
5. Push the primer button while covering the vent hole. Remove your finger from the primer between primes. Do not prime if temperature is above 50° F; prime two times between 50° F and 15° F; and prime four times below 15° F.
6. Pull the starter handle rapidly. Do not allow the handle to snap back, but allow it to rewind slowly while keeping a firm hold on the starter handle.
7. As the engine warms up, rotate the choke knob slowly to OFF position. If the engine falters, return to FULL choke, then slowly move to OFF choke position.
8. Allow the engine to warm up for a few minutes because the engine will not develop full power until it reaches operating temperature.
9. Operate the engine at full throttle (FAST) when throwing snow.

Warm Start

1. If restarting a warm engine after a temporary shut down, rotate choke to OFF instead of FULL and do **not** prime. Pull starter handle as instructed earlier.

Frozen Recoil Starter

If the starter is frozen and will not turn the engine, proceed as follows:

1. Pull as much rope out of the starter as possible.
2. Release the starter handle and let it snap back against the starter.
3. If the engine still fails to start, repeat the first two steps. If continued attempts do not free starter, follow the electric starter procedures to start.
4. Avoid freezing of the recoil starter by following instructions below.

Before Stopping

1. Run engine for a few minutes to help dry off any moisture on engine.
2. **Avoid freezing of the starter** by following these steps **before** stopping the snow thrower:

Recoil Starter

a. With the engine running, pull the starter rope with a rapid, continuous full arm stroke three or four times.

Electric Starter

a. Connect power cord to switch box, then to 120 Volt AC receptacle.
b. While the engine is running, push the starter button and spin the starter for several seconds.
c. Disconnect power cord from the receptacle first, then from the snow thrower.

NOTE: *The unusual sound from pulling the starter rope in case of the recoil starter, or from spinning the starter in case of the electric starter, will not harm the engine.*

To Stop The Snow Thrower

1. To stop the wheels, release the drive control on the snow thrower.
2. To stop throwing snow, release auger control.
3. To stop engine, push throttle control lever to “stop” or “off” and remove ignition key (**Do not turn key**) to prevent unauthorized use of equipment.

To Engage Drive

1. With the engine running near top speed, move shift lever to one of six FORWARD positions or two REVERSE positions. Select a speed appropriate for the snow conditions that exist. Use slower speeds until you are familiar with the process.
2. Squeeze drive control against the right handle and the snow thrower will move. Release it and the drive motion will stop.

To Engage Augers

1. To engage augers and start snow throwing, squeeze the left hand auger control against the left handle. Release to stop augers.
2. While the auger control is engaged, squeeze the drive control to move, release to stop. Do **not** shift speeds while the drive is engaged.

NOTE: *This same lever also locks auger control so you can turn the chute directional control without interrupting the snow throwing process.*

3. Release the auger control; the interlock mechanism should keep the auger control engaged until the drive control is released.
4. Release the drive control to stop both the augers and the wheel drive. To stop the auger, both levers must be released.

To Throw Snow

CAUTION: Check the area to be cleared for foreign objects. Remove, if any.

1. Start the engine following starting instructions.
2. Rotate the discharge chute to the desired position, (away from bystanders and/or buildings) by moving the chute control.
3. Select the speed according to snow condition.

CAUTION: Never move the shift lever without first releasing the drive control.

4. Engage the auger and drive controls following instructions above.
5. The interlock feature will allow you to remove your left hand from the auger control.
6. When clearing the first pass through the snow, control speed of snow thrower according to the depth and condition of snow.
7. To turn the unit left or right, squeeze the respective wheel steering control. See Figure 8.
8. On each succeeding pass, readjust the chute to the desired position and slightly overlap previous path.
9. After the area is cleared, stop the snow thrower following instructions given below.

Operating Tips

NOTE: *Allow the engine to warm up for a few minutes as the engine will not develop full power until it reaches operating temperature.*

WARNING: The temperature of muffler and surrounding areas may exceed 150° F. Avoid these areas.

- For most efficient snow removal, remove snow immediately after it falls.
- Discharge snow downwind whenever possible. Slightly overlap each previous swath.
- Set the skid shoes 1/4" below the scraper bar for normal usage. The skid shoes may be adjusted upward for hard-packed snow.

NOTE: *It is not recommended that you operate this snow thrower on gravel as loose gravel can be easily picked up and thrown by the auger causing an injury or damage to the snow thrower.*

- If for some reason, you have to operate the snow thrower on gravel, keep the skid shoe in the highest position for maximum clearance between ground and shave plate.
- Clean the snow thrower thoroughly after each use.

Chute Clean-Out Tool

The clean-out tool is conveniently fastened to the rear of the auger housing with a mounting clip. **Never** use your hand to clean a clogged chute.

1. Release both the auger control and the **drive/auger control lock.**
2. Stop the engine by moving the throttle to the stop position.
3. Remove the clean-out tool from the mounting clip.
4. Use the shovel-shaped end of the clean-out tool to remove any snow and ice in the chute assembly.
5. Re-fasten the clean-out tool to the mounting clip on the rear of the auger housing and restart engine.
6. While standing in the operator’s position (behind the snow thrower), engage the auger control for a few seconds to clear any remaining snow or ice from the chute assembly before continuing to clear snow.

Drift Cutters (on models so equipped)

Drift cutters should be used when operating the snow thrower in heavy drift conditions.

On models so equipped, drift cutters are assembled to the auger housing inverted. Remove the carriage bolts by unthreading the hex nuts which secure them, and reinstall the drift cutters in their proper position before operating the snow thrower. See Figure 9 .

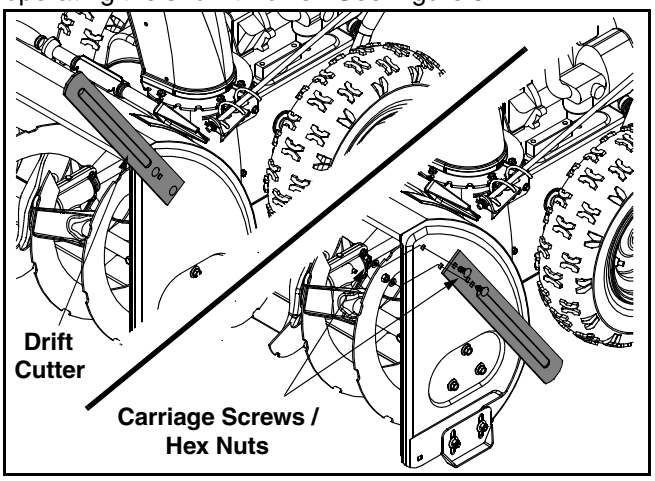

Figure 9

If your unit is not equipped with drift cutters, contact Customer Support as instructed on page 2 for information regarding price and availability.

Snow Thrower ModelDrift Cutter Kit:

All models-OEM-390-679

SECTION 3: MAINTAINING YOUR SNOW THROWER

General Recommendations

- Always observe safety rules when performing any maintenance.
- The warranty on this snow thrower does not cover items that have been subjected to operator abuse or negligence. To receive full value from the warranty, operator must maintain the snow thrower as instructed in this manual.
- Some adjustments will have to be made periodically to maintain your unit properly.
- Periodically check all fasteners and make sure these are tight.

WARNING: Always stop engine and **disconnect** spark plug wire before performing any maintenance or adjustments. Always wear safety glasses during operation or while performing any adjustments or repairs.

Lubrication (See Figure 10)

- **Drive Mechanism:** Once a season or after every 25 hours of operation, remove rear frame cover and lubricate any chains, sprockets, gears, bearings, and shafts with engine oil or lubricant spray.

IMPORTANT: Avoid oil spillage on rubber friction wheel and aluminum drive plate.

- **Gear Shaft:** Once a season, lubricate the gear shaft with a penetrating oil, but **not** grease. Refer to Figure 22 on page 16.
- **Gear Case:** The gear case is lubricated with grease at the factory and does not require regular lubrication. However, if disassembled for any reason, lubricate with 2 ounces of Shell Alvania™ grease (part # 737-0168). Before reassembling, remove old sealant and apply new sealant.

IMPORTANT: Do not overfill the gear case, since damage to the seals could result.

- **Wheels:** Once a season, remove the bolt from each wheel and take the wheel off the axle. Apply a multipurpose automotive grease on the axle shaft before putting back the wheels.
- **Shift Rod:** Use a grease or light oil to lubricate the rotating parts of the shift rod after 25 hours of operation.
- **Pivot Points:** All pivoting points on the snow thrower should be lubricated with a light oil once a season.

- **Drive/Auger Control Lock:** The cam on the ends of the control rods which interlock the drive and auger controls must be lubricated at least once a season or every 25 hours of operation using a multi-purpose automotive grease. The cam can be accessed beneath the handle panel.

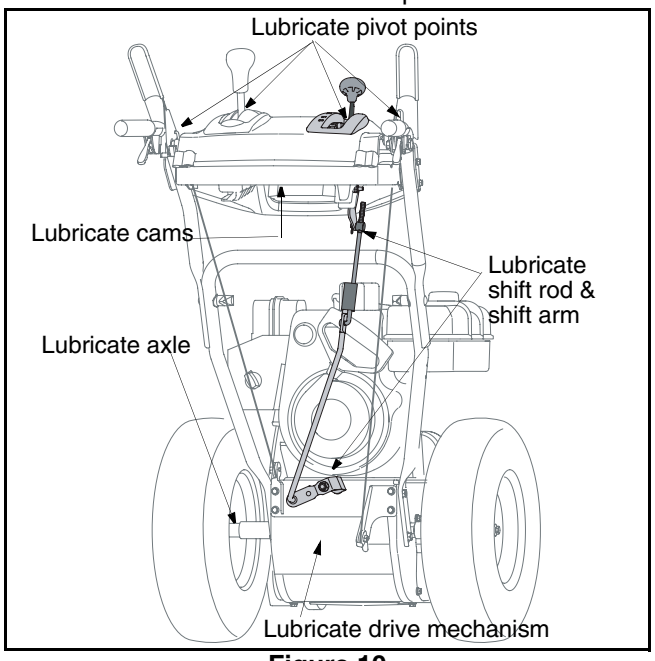

Figure 10

Check V-Belts

Follow instructions below to check the condition of the drive belts every 50 hours of operation.

1. Remove the plastic belt cover on the front of the engine by removing two self-tapping screws.
2. Visually inspect for frayed, cracked, or excessively worn out belts. Replace, if necessary, following instructions on page 14.

Check Friction Wheel

Follow instructions below to check the condition of the friction wheel rubber every 50 hours of operation.

1. Remove the self-tapping screws from the frame cover underneath the snow thrower. Refer to Figure 15.
2. Visually inspect the friction wheel rubber for excessive wear, cracks, or loose fit on the friction wheel drive hub.
3. Also engage the drive control and check if the friction wheel is making contact with drive plate. If it does not make contact, adjust the drive cable (refer to page17) and recheck the friction wheel.
4. Replace friction wheel rubber if necessary. Refer to instructions on page 16.
5. Re-attach frame cover to the snow thrower and put the equipment back to operating position.

Check Chute Cables

Once a season or every 25 hours of operation, whichever is earlier, check whether the chute cables have slackened. Adjust if necessary, following instructions on page 18.

Checking Oil Level

Before operating snow thrower, check the oil level by following steps below.

NOTE: *Although multi-viscosity oils (5W30, 10W30 etc.) improve starting in cold weather, these multi-viscosity oils also result in higher oil consumption when used above 32ºF. Check your snow thrower's engine oil level more frequently to avoid possible engine damage from running low on oil.*

1. With engine on level ground, oil must be to FULL mark on dipstick. See Figure 11 .
2. Stop engine and wait several minutes before checking oil level. Remove oil fill cap and dipstick.
3. Wipe dipstick clean, insert it into oil fill hole and tighten securely.
4. Remove dipstick and check. If oil is not up to the FULL mark on dipstick, add oil.

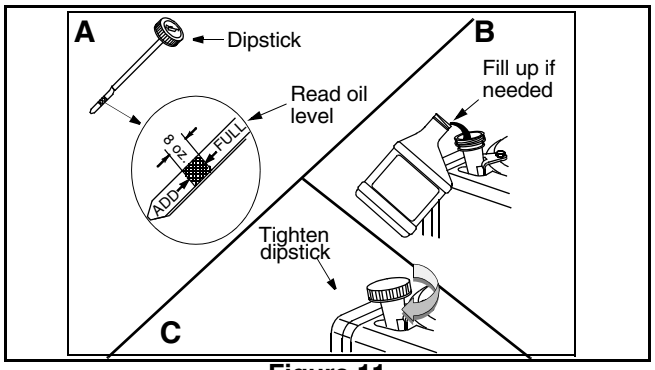

Figure 11

5. Refer to the engine manual for details on grade and procedure to change engine oil.

SECTION 4: SERVICE & ADJUSTMENT

WARNING: Always stop engine, disconnect spark plug wire and move it away from spark plug before performing adjustments or repairs. Always wear safety glasses during operation or while performing any adjustments or repairs.

Servicing Augers

The augers are secured to the spiral shaft with two shear pins and cotter pins. See Figure 12 .

1. If the augers do not turn, check to see if the pins have sheared.
2. Replace the pins if needed. Two replacement shear pins and cotter pins have been provided with the snow thrower. Spray an oil lubricant into shaft before inserting new pins and securing with new cotter pins. See Figure 12.

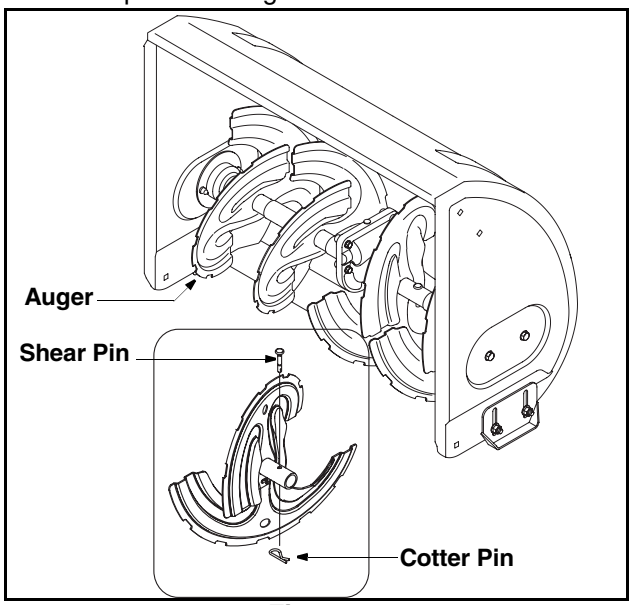

Figure 12

IMPORTANT: NEVER replace the auger shear pins with standard pins. Any damage to the auger gearbox or other components, as a result of doing so, will NOT be covered by your snow thrower's warranty.

Shave Plate and Skid Shoes

The shave plate and skid shoes at the bottom of the snow thrower are subject to wear. Check these periodically and replace as necessary.

Replacing Skid Shoe

1. Remove four carriage bolts and lock nuts which attach two skid shoes to the snow thrower on two sides. See Figure 13 .

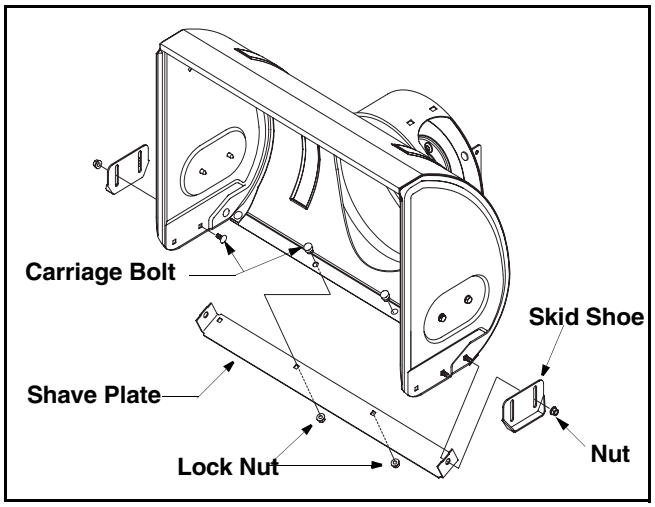

Figure 13

2. Reassemble new skid shoes with the same hardware. Make certain the skid shoes are adjusted to be level.

Replacing Shave Plate

1. After removing both skid shoes, remove four carriage bolts and lock nuts which attach shave plate to the snow thrower housing. See Figure 13 . The shave plate and skid shoes at the bottom of the snow thrower are subject to wear. Check these periodically and replace as necessary.
2. Reassemble new shave plate, making sure heads of the carriage bolts are to the inside of the housing. Tighten securely. Re-install skid shoes.

Replacing Belt

Check the condition of both auger belt and drive belt every 25 hours of snow thrower operation. Replace if either shows signs of wear and tear. To remove and replace either the auger belt or the drive belt, follow the steps below and then proceed to the specific steps listed under respective sub-headings.

1. Remove belt cover by removing the two self-tapping screws that secure it to the snow thrower housing. See Figure 14A.
2. Take auger belt off the pulley following Figure 14B.

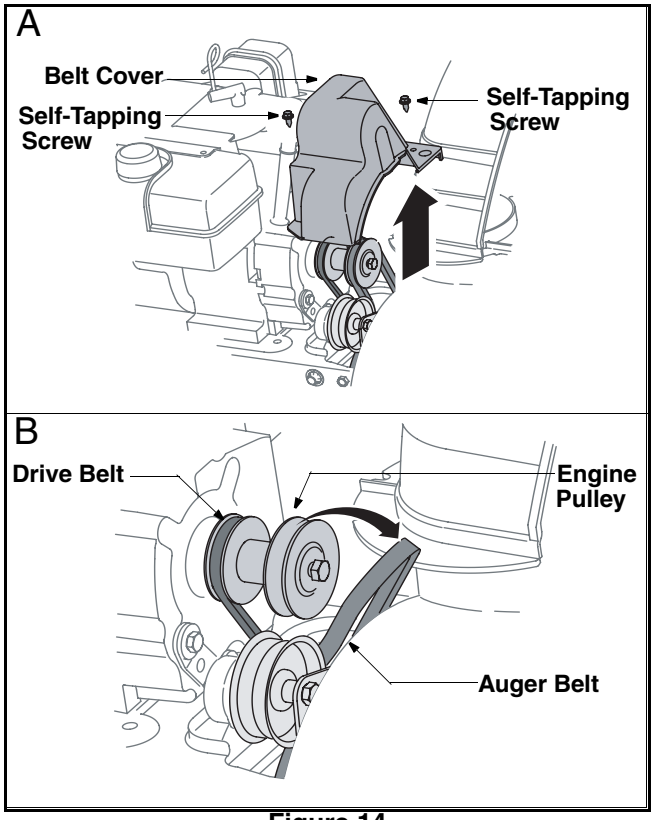

Figure 14

Auger Belt

1. Tip the snow thrower up and forward, so that it rests on the housing. Remove the self-tapping screws from the frame cover underneath the snow thrower and move the frame cover away. See Figure 15.

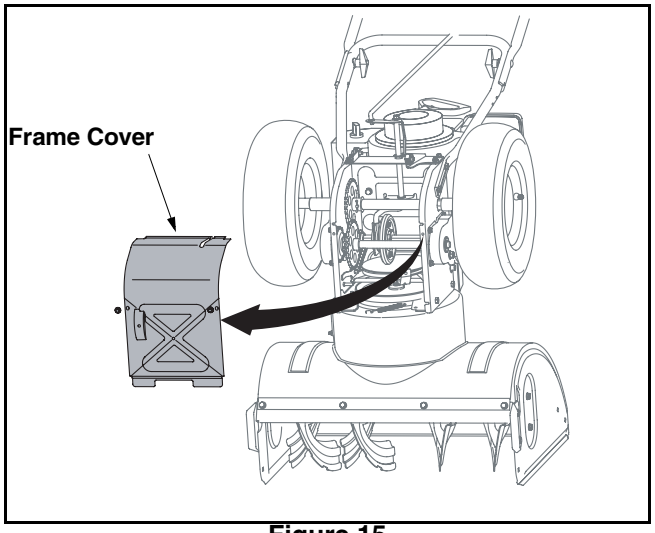

Figure 15

2. Turn the shoulder screw a half a turn and slide it out of the mounting bracket. See Figure 16.
3. Unhook spring to release tension on the auger belt. Remove old belt and replace with new belt, installing it on the pulley. See Figure 16.

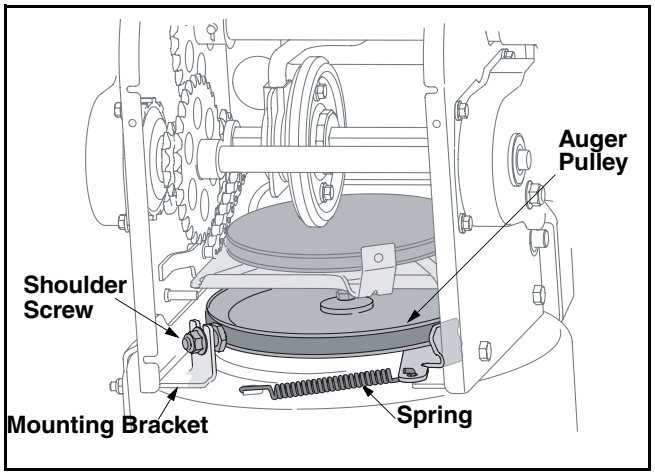

Figure 16

4. Wrap auger belt around the auger pulley. See Figure 16.
5. Re-insert shoulder screw into the mounting bracket and tighten to secure.
6. Wrap auger belt behind the idler. Reattach the spring to the bolt where it was earlier secured.
7. Re-install frame cover and flip the snow thrower back to the operating position.
8. Wrap auger belt around the engine pulley.
9. Re-install belt cover with the self-tapping screws removed earlier.

Drive Belt

1. Push idler counter-clockwise and insert a Phillips head screwdriver in the hole on the idler as shown in Figure 17. This will release tension on drive belt.

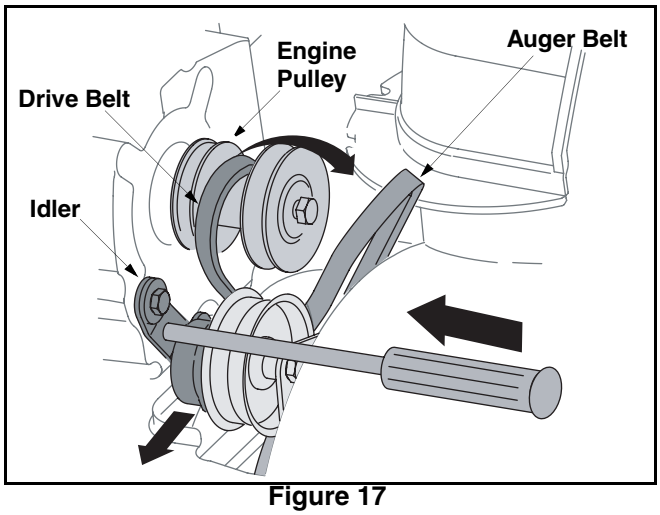

Figure 17

2. Pull drive belt out and away from the engine pulley to remove. See Figure 17.
3. Tip the snow thrower up and forward, so that it rests on the housing. Remove the self-tapping screws from frame cover underneath the snow thrower and move the frame cover away. Refer to Figure 15.

4. Back out the stop bolt to create sufficient gap between the friction wheel disc and the drive pulley. Pull the drive belt from around the drive pulley and clear it off the friction wheel disc. See Figure 18.

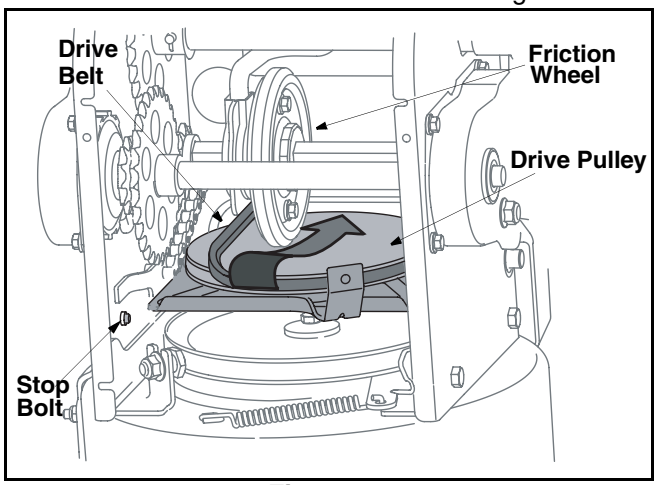

Figure 18

5. Now moving to the other side of the snow thrower again, slide the belt off the crankshaft.
6. Replace with new belt, first sliding it through the crank shaft, then working it around the groove of the drive pulley and finally wrapping it around the engine pulley from where the old belt was removed. Once the belt is firmly placed on the pulleys, make sure to remove the screwdriver from the idler.
7. Re-install auger belt on the engine pulley.
8. Re-attach frame cover on the snow thrower housing and put the equipment back to operating position. Re-attach belt cover with two self-tapping screws removed earlier.

Friction Wheel Rubber

1. Check the rubber on the friction wheel after 25 hours of operation, and periodically thereafter. Replace the rubber if any signs of wear or cracking are found.
2. Drain the gasoline from the snow thrower, or place a piece of plastic under the gas cap. Move shift lever to the R2 position.
3. Tip the snow thrower so that it rests on the housing. Remove the self-tapping screws from the frame cover underneath the snow thrower.
4. Remove bolt securing the right wheel, and remove the wheel from the axle.
5. Remove the four screws securing the right drive cover to the frame. Remove the drive cover from the side of the frame. See Figure 19.

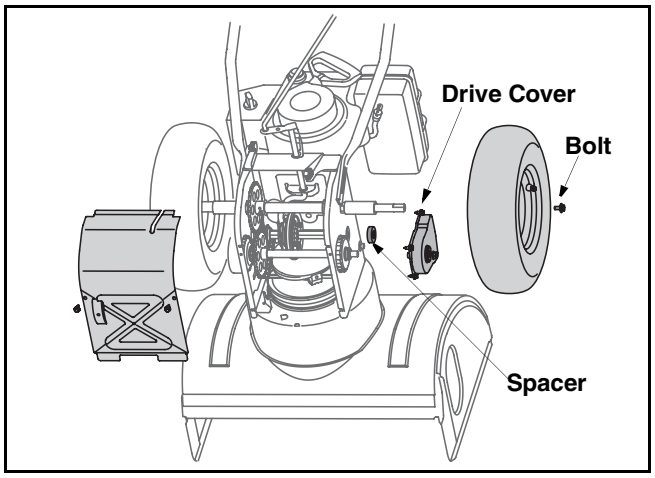

Figure 19

6. Holding the friction wheel assembly, slide the hex gear shaft to the right. See Figure 20. The spacer on right side of hex gear shaft may fall.

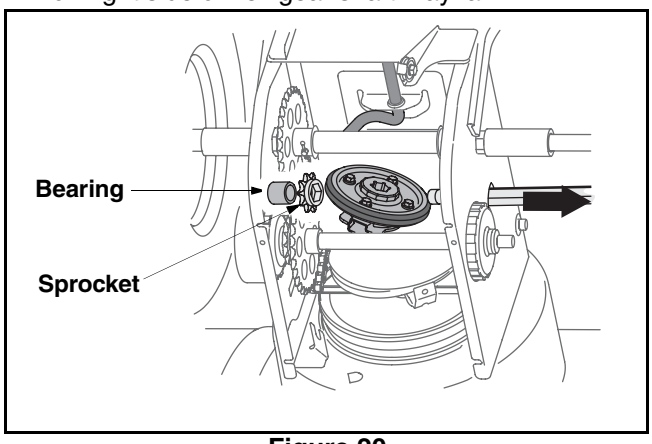

Figure 20

7. Lift the friction wheel assembly out between the axle shaft and the drive shaft assemblies.
8. Remove the four screws from the friction wheel assembly. Remove friction wheel rubber from between the friction wheel plate. See Figure 21.

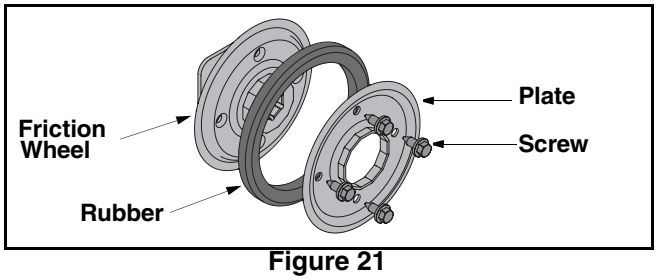

Figure 21

9. Reassemble new friction wheel rubber to the friction wheel assembly, tightening the four screws in rotation and with equal force. See Figure 21.

IMPORTANT: Assemble the rubber on the friction wheel equally for proper functioning.

10. Insert the shift arm assembly into the friction wheel assembly and hold assembly in position. See Figure 22.
11. Slide hex gear shaft through right side of the housing and the friction wheel assembly.
12. Insert the hex gear shaft through the sprocket and the spacer. Make certain that chain engages both the large and the small sprocket.

NOTE: *If the sprocket fell from the snow thrower while removing the hex gear shaft, place the sprocket on the hex gear shaft. Position the hex hub of the sprocket toward the friction wheel when sliding the sprocket on to hex gear shaft.*

13. Align the hex gear shaft with the left bearing and carefully guide this bearing into left side of housing.
14. Install the right bearing on the hex gear shaft and check that the spacer and bearing in the drive cover are aligned to the steerable shaft. See Figure 22.

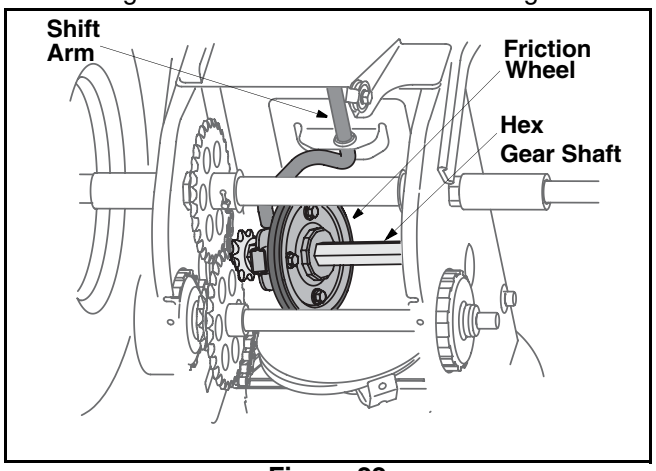

Figure 22

15. Reassemble the drive cover with four screws removed in step 6. Install the right wheel with the bolt removed earlier.
16. Reassemble the frame cover with the self-tapping screws. Flip the equipment back to the operating position and re-attach the belt cover.

NOTE: *If you placed plastic under the gas cap, be certain to remove it.*

Adjustments

Drive Control

Refer to the Final Adjustment section of the Assembly instructions to adjust the drive control. To check the adjustment, proceed as follows:

1. With the snow thrower tipped forward (be certain to drain the gasoline or place plastic film under the gas cap if the snow thrower has already been operated), remove the frame cover underneath the snow thrower by removing the self-tapping screws.
2. With the drive control released, there must be 1/8" clearance between the friction wheel and the drive plate in all positions of the shift lever.
3. With the drive control engaged, the friction wheel must contact the drive plate (Figure 19).
4. If adjustment is necessary, loosen the jam nut on the drive cable and thread the cable in or out as necessary. Tighten the jam nut to secure the cable when correct adjustment is reached. Reassemble the frame cover.

NOTE: *If you placed plastic under the gas cap, be certain to remove it.*

Auger Control

Refer to page 6 for details.

Shift Rod

To adjust the shift rod, proceed as follows.

1. Place shift lever in sixth (6) position or the fastest forward speed. See Figure 23A.

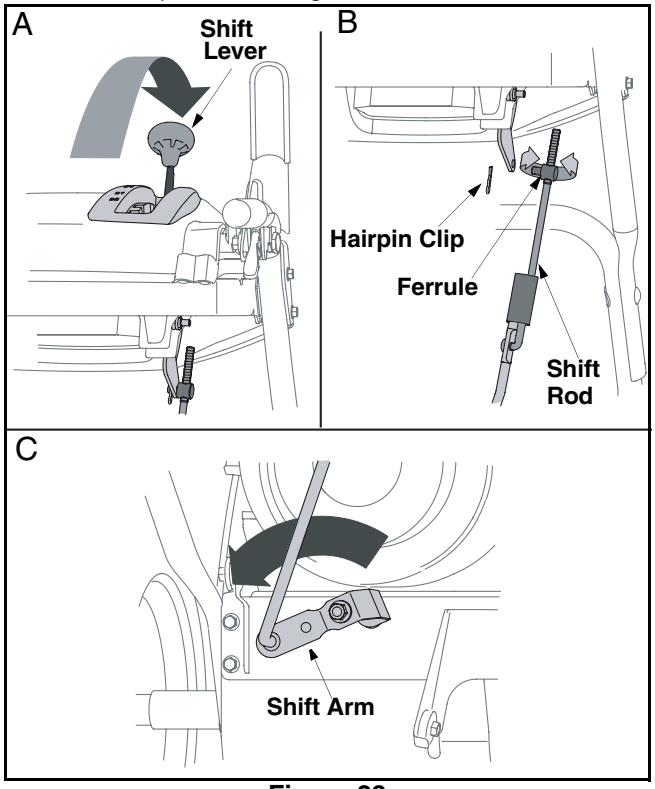

Figure 23

2. Remove hairpin clip from the shift handle under the handle panel. See Figure 23B.
3. Push shift arm assembly down as far as it will go. See Figure 23C.
4. Rotate the ferrule up or down the shift rod as necessary until the ferrule lines up with the upper hole in the shift lever. See Figure 23B.
5. Insert ferrule from right side of the snow thrower into the upper hole in shift lever. See Figure 23B.
6. Reinstall the hairpin clip.

7. Check for correct adjustment before operating the snow thrower.

Skid Shoe

Refer to page 7 for details.

Chute Control

Once a season or every 25 hours of operation, whichever is earlier, check whether the chute control cables have slackened. If the chute does not rotate fully or its pitch cannot be moved up or down, the chute control cables will have to be adjusted.

To adjust these cables, proceed as follows:

1. To tighten cable, loosen the top nut and tighten the bottom nut on the cable.
2. Adjust equally on both sides by working on all cables. See Figure 24.

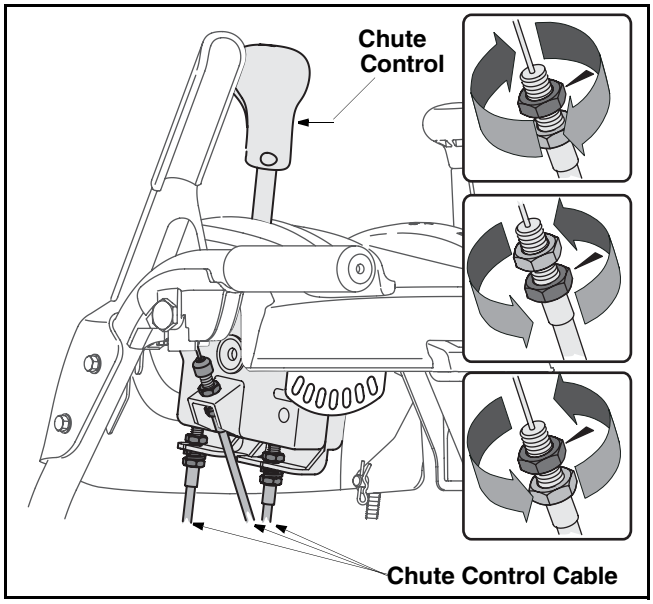

Figure 24

SECTION 5: OFF-SEASON STORAGE

If your snow thrower is left unused for 30 days or longer, it needs to be prepared for storage. Proper storage ensures longer life of the snow thrower.

Preparing For Storage

WARNING: Never store snow thrower with fuel in tank indoors or in poorly ventilated areas, where fuel fumes may reach an open flame, spark or pilot light as on a furnace, water heater, clothes dryer or gas appliance.

WARNING: Drain fuel into approved container outdoors, away from any open flame. Be certain engine is cool. Do not smoke.

WARNING: Do not drain carburetor if using fuel stabilizer. Never use engine or carburetor cleaning products in the fuel tank or permanent damage may occur.

It is important to prevent gum deposits from forming in essential fuel system parts of the engine such as the carburetor, fuel filter, fuel hose or tank during storage.

Fuel left in engine during warm weather deteriorates and will cause serious starting problems. To avoid such problems, the fuel system *should be emptied* before storage for 30 days or longer.

NOTE: *Also experience indicates that alcohol blended fuels (called gasohol or using ethanol or methanol) can attract moisture which leads to separation and formation of acids during storage. Acidic gas can damage the fuel system of an engine while in storage.*

1. Remove gasoline from the carburetor and the fuel tank to prevent gum deposit in the engine.
2. Run the engine until the fuel tank is empty and it stops due to lack of fuel.
3. Remove the spark plug and pour one (1) ounce of engine oil through the spark plug hole into the cylinder. Place a rag over the hole. Crank the engine several times to distribute the oil. Replace spark plug.

NOTE: *Follow the engine manual to further prepare the snow thrower engine for storage.*

4. When storing the snow thrower in an unventilated or metal storage shed, rustproof the equipment. Using a light oil or silicone, coat the equipment, especially any chains, springs, bearings and cables.
5. Remove all dirt from exterior of engine and equipment.
6. Follow lubrication recommendations on page 12.
7. Store snow thrower in a clean, dry area.

SECTION 6: TROUBLESHOOTING

Problem	Cause	Remedy
Engine fails to start.	1. Fuel tank empty, or stale fuel. 2. Blocked fuel line. 3. Choke not in ON position. 4. Faulty spark plug. 5. Safety key not in ignition switch on engine. 6. Spark plug wire disconnected. 7. Primer button not being used properly. 8. Fuel shut-off valve closed. (If Equipped)	1. Fill tank with fresh gasoline. 2. Clean the fuel line. 3. Move switch to ON position. 4. Clean, adjust gap or replace. 5. Insert the key fully into the switch. 6. Connect spark plug wire. 7. Refer to the engine manual. 8. Open fuel shut-off valve. (If Equipped)
Engine runs erratic.	1. Unit running on CHOKE. 2. Blocked fuel line or stale fuel. 3. Water or dirt in fuel system. 4. Carburetor out of adjustment.	1. Move choke lever to OFF position. 2. Clean fuel line and fill tank with clean, fresh gasoline. 3. Drain fuel tank and carburetor. Refill with fresh fuel. 4. Contact service center.
Loss of power.	1. Spark plug wire loose. 2. Gas cap vent hole plugged. 3. Exhaust port plugged.	1. Connect and tighten spark plug wire. 2. Remove ice and snow from gas cap. Be certain vent hole is clear. 3. Contact service center.
Engine overheats.	1. Carburetor not adjusted properly.	1. Contact service center.
Excessive vibration.	1. Loose parts or damaged auger.	1. Stop engine immediately and disconnect spark plug wire. Tighten all bolts and nuts. If vibration continues, have unit serviced by an authorized service center.
Unit fails to propel itself.	1. Drive control cable in need of adjustment. 2. Drive belt loose or damaged.	1. Adjust drive control cable. Refer to Adjustments. 2. Replace drive belt.
Unit fails to discharge snow.	1. Chute assembly clogged. 2. Foreign object lodged in auger. 3. Auger control cable in need of adjustment. 4. Auger belt loose or damaged. 5. Shear pin(s) sheared.	1. Stop engine immediately and disconnect spark plug wire. Clean chute assembly and inside of auger housing with clean-out tool or stick. 2. Stop engine immediately and disconnect spark plug wire. Remove object from auger with clean-out tool or a stick. 3. Refer to Final Adjustments on page 6. 4. Refer to page 15. 5. Replace with new shear pin(s).



NOTE: *This section addresses minor service issues. For further details, contact an authorized service center or call 1(800)800-7310 for assistance.*

SECTION 7: PARTS LIST FOR MODEL 5ML

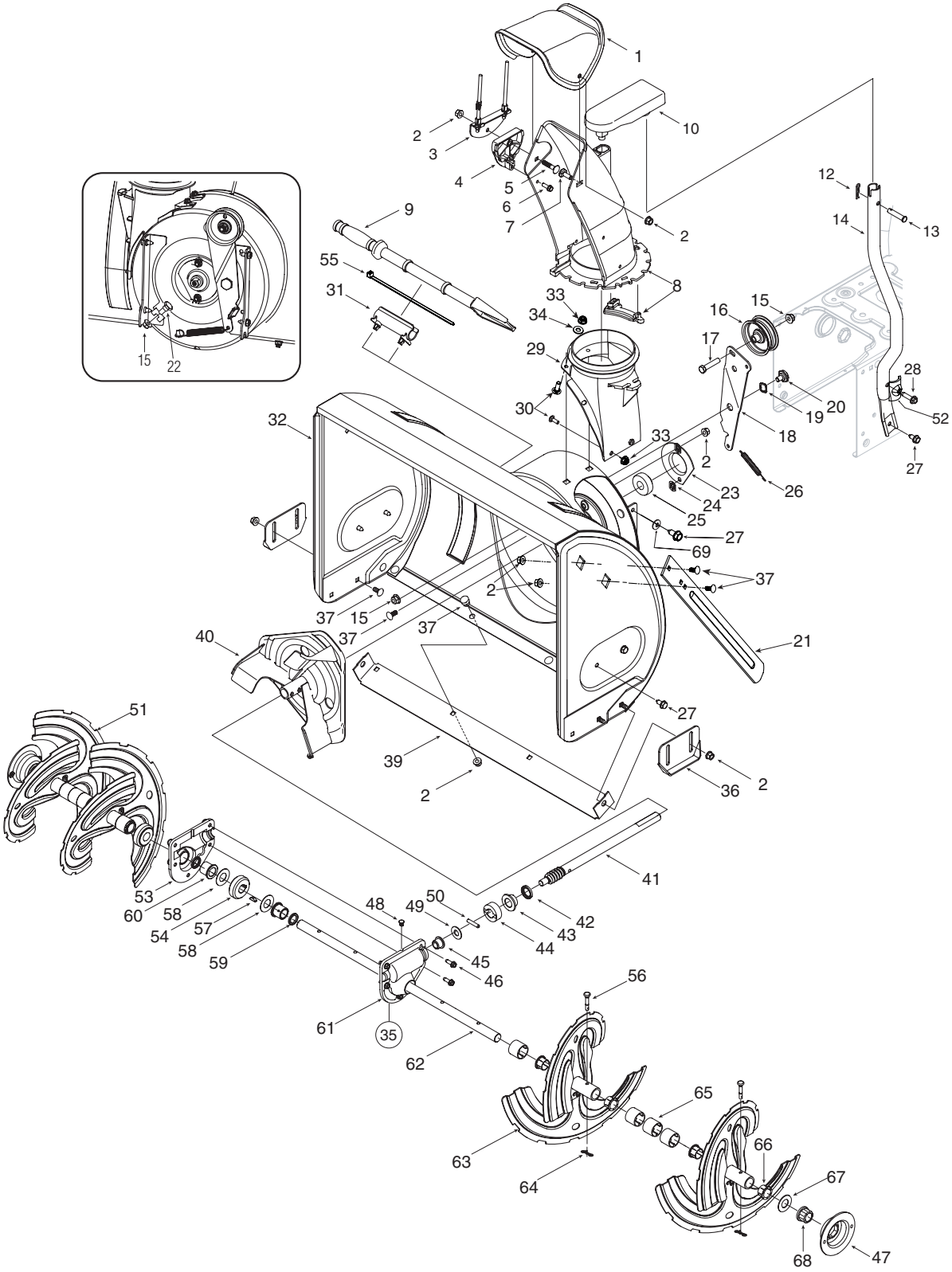

Model 5ML

Ref. No.	Part No.	Description	Ref. No.	Part No.	Description
1.	731-04427A	Upper Chute	36.	784-5580	Slide Shoe
2.	712-04063	Flange Lock Nut, 5/16-18	37.	710-0451	Carriage Bolt
3.	784-5594	Cable Bracket	39.	790-00118	Shave Plate
4.	731-1313C	Chute Tilt Cable Guide	40.	684-04057	Impeller Assembly
5.	710-0262	Carriage Bolt, 5/16-18 x 1.50	41.	717-04126	Worm Shaft
6.	710-0895	Hi-Lo Screw, 1/4-15 x 0.75	42.	721-0327	Oil Seal
7.	710-04071	Carriage Bolt, 5/16-18 x 1.0	43.	741-0662	Flange Bearing
8.	631-04132	Lower Chute Assembly	44.	718-04071	Thrust Collar
9.	731-2643	Clean-Out Tool	45.	741-0663	Flange Bearing
10.	684-04116	4-Way Chute Control™ Assembly	46.	710-0642	TT Screw, 1/4-20 x 0.75
12.	714-0104	Cotter Pin	47.	790-00087	Bearing Housing
13.	711-0415	Clevis Pin	48.	721-0325	Plug
14.	749-04155	Chute Support Tube	49.	736-3084	Flat Washer
15.	712-04065	Flange Lock Nut	50.	715-04021	Dowel Pin
16.	756-0981A	Flat Idler Pulley	51.	684-04108	Spiral Assembly- RH
17.	710-0347	Hex Bolt, 3/8-16 x 1.75	52.	784-5599	Handle Tab
18.	790-00080	Auger Idler Bracket	53.	618-0123	Reducer Hsg.-RH (Incl Ref. 59-60)
19.	736-0174	Wave Washer	54.	717-0528A	Worm Gear, 20T
20.	738-0281	Shoulder Screw	55.	725-0157	Cable Tie
21.	05139A†	Blade Guide	56.	738-04124	Shear Pin
22.	738-0143	Shoulder Screw	57.	714-0161	Key
23.	790-00075	Bearing Housing	58.	736-0351	Flat Washer
24.	726-04012	Push Nut	59.	721-0179	Oil Seal
25.	741-0309	Ball Bearing	60.	741-0661A	Flange Bearing
26.	732-0611	Extension Spring	61.	618-0124	Reducer Hsg.-LH (Incl Ref. 59-60)
27.	710-0726	AB Screw, 5/16-12 x 0.75	62.	711-04283	Auger Axle
28.	710-0909A	TT Screw, 5/16-18 x 1.750	63.	684-04107	Spiral Assembly- LH
29.	731-04705	Chute Adapter	64.	714-04040	Bow Tie Cotter Pin
30.	710-0703	Carriage Screw, 1/4-20 x 0.75	65.	731-04870	Spacer
31.	731-2635	Clean-out Tool Mtg. Bracket	66.	741-0493A	Flange Bushing
32.	684-04073	Auger Housing Assembly: 28”	67.	736-0188	Flat Washer
33.	712-04064	Flange Lock Nut, 1/4-20	68.	741-0245	Hex Flange Bearing
34.	736-0463	Flat Washer	69.	736-0242	Bell Washer
35.	618-04173	Gearbox Assembly Complete	—	629-0071	Extension Cord (Not Shown)

† If Equipped

Model 5ML

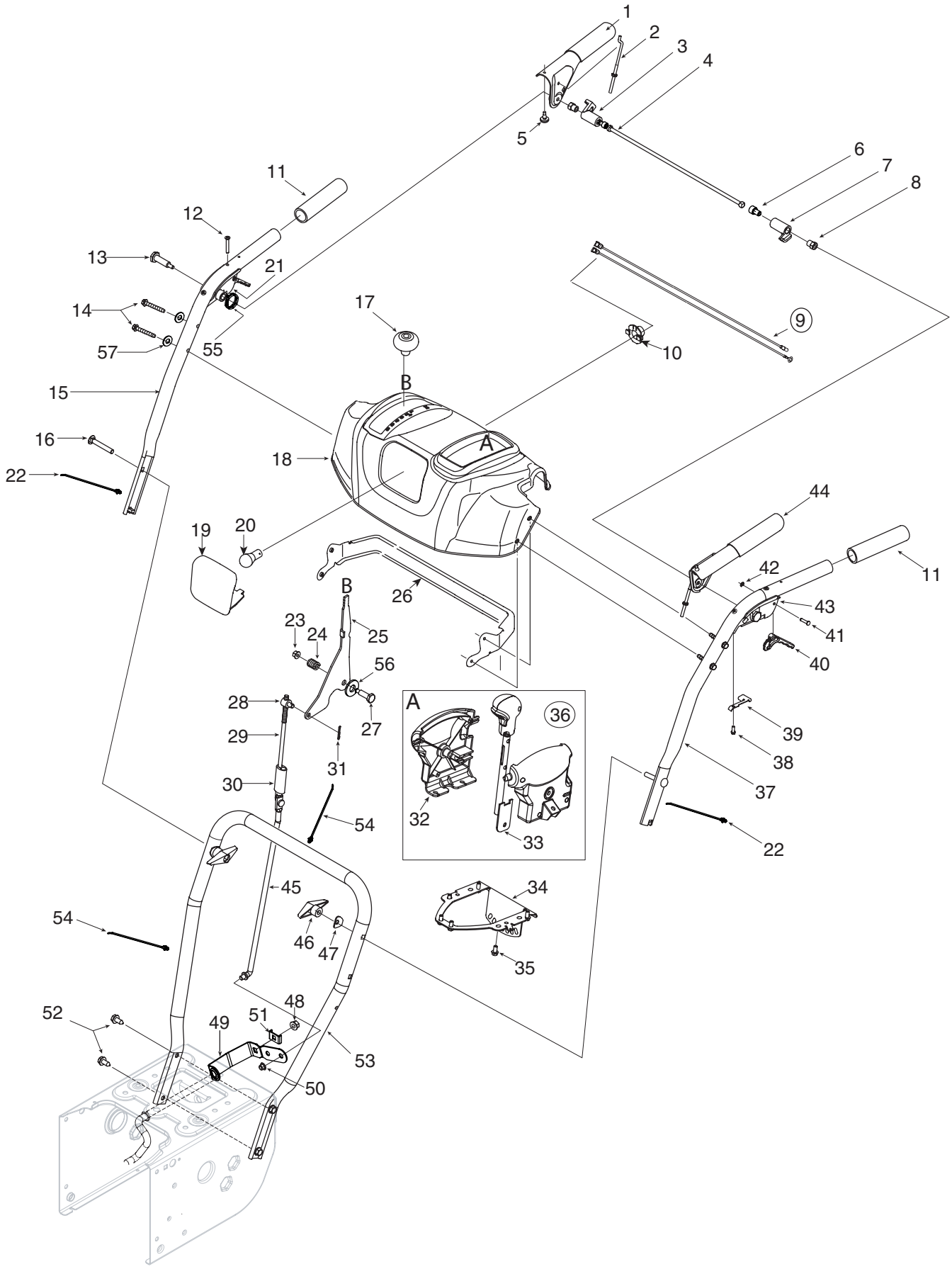
1
2
3
4
5
6
7
8
9
10
11
12
13
14
15
16
17
18
19
20
21
22
23
24
25
26
27
28
29
30
31
32
33
34
35
36
37
38
39
40
41
42
43
44
45
46
47
48
49
50
51
52
53
54
55
56
57
A
B

Model 5ML

Ref. No.	Part No.	Description
1.	684-04109A	Handle Engagement Assembly RH
2.	746-0778	Cable Z Fitting
3.	731-04894	Lock Plate
4.	711-04287	Pivot Rod
5.	735-0199A	Rubber Bumper
6.	710-04354	Screw, 1/4-20 x.375
7.	731-04896	Clutch Lock Cam
8.	712-04081A	Shoulder Nut, 1/4-20
9.	725-04214	Wire Harness
10.	725-1649	Light Socket
11.	720-0274	Handle Grip
12.	710-1233	Screw, #10-24 x 0.375
13.	738-04122	Shoulder Screw, 1/4-20 x 1.345
14.	710-1026	Screw, 1/4-20 x 1.750
15.	749-04141	Upper Handle RH
16.	710-0449	Carriage Screw, 5/16-18 x 2.25
17.	720-04046	Shift Knob
18.	631-04128	Handle Panel (incl. ref. #19)
19.	731-04864	Lens
20.	725-04213	Lamp
21.	631-04134	Handle Clutch Lock - RH
22.	725-0157	Cable Tie
23.	712-04064	Flange Lock Nut, 1/4-20
24.	732-0193	Compression Spring
25.	790-00130	Shift Lever
26.	790-00140	Panel Bracket
27.	738-04125	Shoulder Screw
28.	711-0677	Ferrule
29.	747-04348	Upper Shift Rod
30.	750-0963	Shift Rod Connector
31.	714-0104	Hairpin Clip
32.	753-04864	Joystick Housing w/Fasteners
33.	753-04863	Knob Assembly w/ Trigger
34.	790-00131	Joystick Bracket
35.	710-04187	Hi-Lo Screw, 1/4-15 x 0.5
36.	684-04116	4-Way Chute Control™ Assembly
37.	749-04142	Upper Handle LH
38.	710-04326	Screw, #8-16 x 0.50
39.	732-04219	Clutch Lock Spring
40.	731-04954	Steering Control
41.	738-04126	Pin, 3/16
42.	716-04036	E Ring
43.	631-04133	Handle Clutch Lock - LH
44.	684-04110A	Handle Engagement Assembly LH
45.	747-04266	Lower Shift Control Rod
46.	720-0284	Handle Knob Assembly
47.	736-0451	Saddle Washer
48.	712-04063	Flange Lock Nut, 5/16-18
49.	732-04205	Shift Arm
50.	726-0135	Speed Nut
51.	790-00156	Shift Bracket Spacer
52.	710-0726	AB Screw, 5/16-12 x 0.75
53.	749-04138	Lower Handle
54.	726-0470	Cable Tie
55.	732-04238	Torsion Spring
56.	736-0262	Flat Washer
57.	736-0463	Washer, Flat,.25 x.630 x.0515

Model 5ML

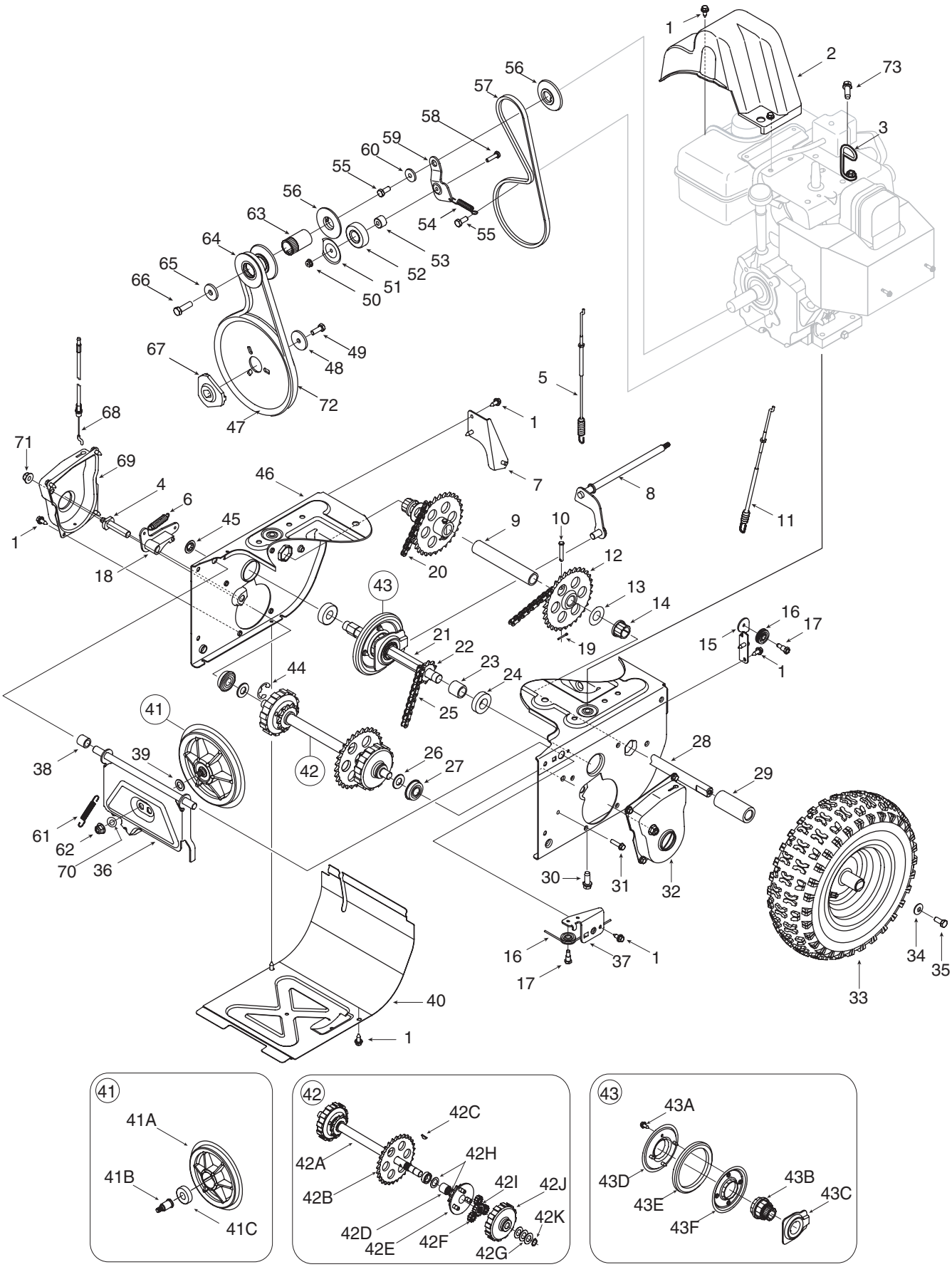

1
2
73
3
56
57
58
59
60
55
56
63
64
65
66
54
55
53
52
51
50
49
48
67
72
47
5
68
71
69
4
6
1
18
45
46
1
7
8
9
10
11
12
20
43
13
14
19
16
17
15
1
21
22
23
24
25
44
41
38
39
42
26
27
28
29
61
62
70
36
30
31
32
16
17
37
1
34
35
33
40
1
41
41A
41B
41C
42
42C
42A
42H
42B
42I
42J
42K
42D
42E
42F
42G
43
43A
43D
43B
43E
43C
43F

Model 5ML

Ref No.	Part No.	Description
1.	710-1652	AB Screw, 1/4-20 x 0.625
2.	731-04792	Belt Cover
3.	732-0705	Cable Guide
4.	711-1268A	Actuator Shaft
5.	746-04086	Drive Clutch Cable
6.	732-0209	Extension Spring
7.	790-00055	Roller Bracket
8.	684-04140	Shift Rod Assembly
9.	750-04312	Axle Support Tube
10.	711-1364	Clevis Pin
11.	746-0897	Auger Clutch Cable
12.	713-04009	Sprocket
13.	736-0351	Flat Washer
14.	741-0245	Hex Flange Bearing
15.	784-5687A	Auger Clutch Cable Guide
16.	756-0625	Cable Roller
17.	738-0924	C Screw, 1/4-28 x 0.375
18.	618-0043	Dogg Assembly - RH
—	618-0044	Dogg Assembly - LH (not shown)
19.	714-0507	Hairpin Clip
20.	713-0286	Chain
21.	711-04270	Drive Shaft
22.	713-04015	Sprocket
23.	750-1162	Spacer
24.	741-0600	Ball Bearing
25.	713-04011	Chain
26.	736-0626	Flat Washer
27.	741-04076	Ball Bearing
28.	738-04105A	Axle
29.	731-04873	Spacer
30.	710-0654A	TT Sems Screw, 3/8-16 x 1.0
31.	710-0788	TT Screw, 1/4-20 x 1.0
32.	790-00056	Shaft Retainer - LH
33.	634-04141	Wheel Complete
34.	736-0242	Bell Washer
35.	710-0627	Hex Bolt, 5/16-24 x 0.75
36.	684-04045	Friction Wheel Support Bracket
37.	790-00096	Auger Cable Guide Bracket
38.	748-0190	Spacer
39.	736-0300	Flat Washer
40.	790-00054	Frame Cover
41.	656-0012A	Friction Wheel Disc Assembly
A.	756-0648A	Friction Wheel Disc
B	738-0865	Friction Disc Bearing Pin
C.	741-0600	Ball Bearing
42.	618-04116	Drive Shaft Assembly
A.	711-04271	Drive Shaft
B.	713-04010	Sprocket
C.	714-0214	Key
D.	750-1177	Spacer
E.	618-0577A	Planetary Carr. Assembly
F.	717-1209A	Gear, 12T
G.	736-0502	Flat Washer
H.	736-0336	Flat Washer
I.	717-1210A	Gear,18T
J.	717-1495B	Planetary Ring Gear
K.	716-0194	Retainer Ring
43.	684-04066	Friction Wheel Assembly
A.	710-1652	AB Screw, 1/4-20 x 0.625
B.	718-04070	Friction Wheel Hub
C.	618-04169	Bearing Assembly
D.	790-00011	Friction Plate
E.	735-0243B	Friction Wheel Rubber
F.	790-00010	Friction Plate
44.	716-0136	Retainer Ring
45.	726-0221	Speed Nut
46.	790-00073	Wheel Drive Frame
47.	756-04109	Auger Pulley
48.	736-0505	Flat Washer
49.	710-1245B	Hex Bolt, 5/16-24 x 0.875
50.	712-04064	Flange Lock Nut, 1/4-20
51.	790-00062	Bearing Washer
52.	741-0919	Ball Bearing
53.	750-04230	Spacer
54.	732-0710	Extension Spring
55.	710-0627	Hex Bolt, 5/16-24 x 0.75
56.	756-04114	Pulley Half
57.	754-0456	V-Belt, 3/8 x 28.6
58.	710-0597	Hex Bolt, 1/4-20 x 1.0
59.	790-00082	Drive Clutch Idler Bracket
60.	748-0234	Shoulder Spacer
61.	732-0264	Extension Spring
62.	712-0711	Jam Nut, 3/8-24
63.	750-04303	Spacer
64.	756-04113	Pulley Half
65.	736-0247	Flat Washer
66.	710-0191	Hex Bolt, 3/8-24 x 1.25
67.	748-04053	Pulley Adapter
68.	746-0956	Steering Cable
69.	790-00057	Shaft Retainer - RH
70.	736-0105	Bell Washer
71.	712-04065	Flange Lock Nut, 3/8-16
72.	754-04050	V-Belt,.500 x 35.00 Lg
73.	710-0602	TT Screw, 5/16-18 x 1.00

NOTES

NOTES

MANUFACTURER'S LIMITED WARRANTY FOR:

The limited warranty set forth below is given by MTD LLC with respect to new merchandise purchased and used in the United States, its possessions and territories.

"MTD"warrants this product against defects in material and workmanship for a period of two (2) years commencing on the date of original purchase and will, at its option, repair or replace, free of charge, any part found to be defective in materials or workmanship. This limited warranty shall only apply if this product has been operated and maintained in accordance with the Operator's Manual furnished with the product, and has not been subject to misuse, abuse, commercial use, neglect, accident, improper maintenance, alteration, vandalism, theft, fire, water, or damage because of other peril or natural disaster. Damage resulting from the installation or use of any part, accessory or attachment not approved by MTD for use with the product(s) covered by this manual will void your warranty as to any resulting damage.

Normal wear parts are warranted to be free from defects in material and workmanship for a period of thirty (30) days from the date of purchase. Normal wear parts include, but not limited to items such as: batteries, belts, blades, blade adapters, grass bags, rider deck wheels, seats, snow thrower skid shoes, shave plates, auger spiral rubber and tires.

HOW TO OBTAIN SERVICE: Warranty service is available, WITH PROOF OF PURCHASE, through your local authorized service dealer. To locate the dealer in your area, check your Yellow Pages, or contact MTD LLC at P.O. Box 361131, Cleveland, Ohio 44136-0019, or call 1-800-800-7310 or 1-330-220-4683 or log on to our Web site at www.mtdproducts.com.

This limited warranty does **not** provide coverage in the following cases:

a. The engine or component parts thereof. These items may carry a separate manufacturer's warranty. Refer to applicable manufacturer's warranty for terms and conditions.
b. Log splitter pumps, valves, and cylinders have a separate one year warranty.
c. Routine maintenance items such as lubricants, filters, blade sharpening, tune-ups, brake adjustments, clutch adjustments, deck adjustments, and normal deterioration of the exterior finish due to use or exposure.
d. Service completed by someone other than an authorized service dealer.
e. MTD does not extend any warranty for products sold or exported outside of the United States, its possessions and territories, except those sold through MTD's authorized channels of export distribution.
f. Replacement parts that are not genuine MTD parts.
g. Transportation charges and service calls.

No implied warranty, including any implied warranty of merchantability of fitness for a particular purpose, applies after the applicable period of express written warranty above as to the parts as identified. No other express warranty, whether written or oral, except as mentioned above, given by any person or entity, including a dealer or retailer, with respect to any product, shall bind MTD. During the period of the warranty, the exclusive remedy is repair or replacement of the product as set forth above.

The provisions as set forth in this warranty provide the sole and exclusive remedy arising from the sale. MTD shall not be liable for incidental or consequential loss or damage including, without limitation, expenses incurred for substitute or replacement lawn care services or for rental expenses to temporarily replace a warranted product.

Some states do not allow the exclusion or limitation of incidental or consequential damages, or limitations on how long an implied warranty lasts, so the above exclusions or limitations may not apply to you.

In no event shall recovery of any kind be greater than the amount of the purchase price of the product sold. **Alteration of safety features of the product shall void this warranty.** You assume the risk and liability for loss, damage, or injury to you and your property and/or to others and their property arising out of the misuse or inability to use the product.

This limited warranty shall not extend to anyone other than the original purchaser or to the person for whom it was purchased as a gift.

HOW STATE LAW RELATES TO THIS WARRANTY: This limited warranty gives you specific legal rights, and you may also have other rights which vary from state to state.

IMPORTANT: Owner must present Original Proof of Purchase to obtain warranty coverage.

MTD LLC, P.O. BOX 361131 CLEVELAND, OHIO 44136-0019; Phone: 1-800-800-7310, 1-330-220-4683