Safe Operation Practices • Set-Up • Operation • Maintenance • Service • Troubleshooting • Warranty

OPERATOR'S MANUAL

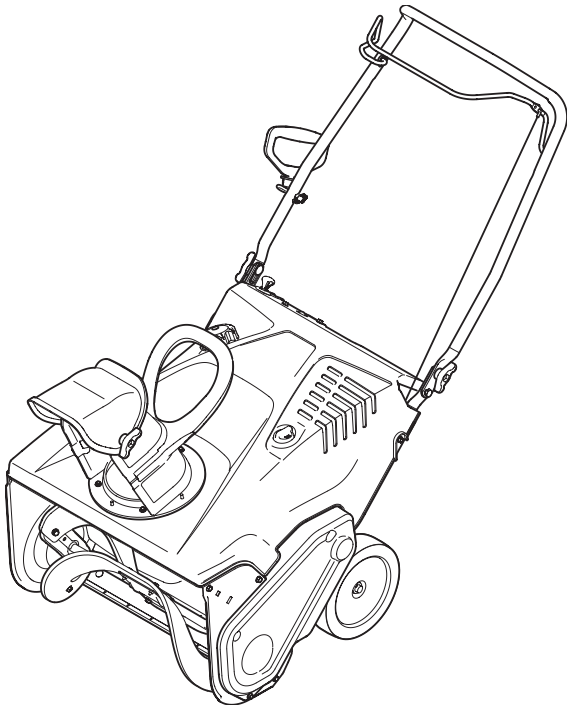

Single-Stage Snow Thrower

— Model 2T5 shown —

⚠ WARNING

READ AND FOLLOW ALL SAFETY RULES AND INSTRUCTIONS IN THIS MANUAL BEFORE ATTEMPTING TO OPERATE THIS MACHINE.
FAILURE TO COMPLY WITH THESE INSTRUCTIONS MAY RESULT IN PERSONAL INJURY.

MTD LLC, P.O. BOX 361131 CLEVELAND, OHIO 44136-0019

Printed In USA

Form No. 769-07130
(May 5, 2011)

To The Owner

1

Thank You

Thank you for purchasing an MTD Snow Thrower. It was carefully engineered to provide excellent performance when properly operated and maintained.

Please read this entire manual prior to operating the equipment. It instructs you how to safely and easily set up, operate and maintain your machine. Please be sure that you, and any other persons who will operate the machine, carefully follow the recommended safety practices at all times. Failure to do so could result in personal injury or property damage.

All information in this manual is relative to the most recent product information available at the time of printing. Review this manual frequently to familiarize yourself with the machine, its features and operation. Please be aware that this Operator's Manual may cover a range of product specifications for various models. Characteristics and features discussed and/or illustrated in this manual may not be applicable to all models. We reserve the right to change product specifications, designs and equipment without notice and without incurring obligation.

If you have any problems or questions concerning the machine, phone your local authorized MTD service dealer or contact us directly. MTD's Customer Support telephone numbers, website address and mailing address can be found on this page. We want to ensure your complete satisfaction at all times.

Throughout this manual, all references to *right* and *left* side of the machine are observed from the operating position

Table of Contents

Safe Operation Practices 3
Assembly & Set-Up 7
Controls & Features 9
Operation 10
Maintenance & Adjustment 11
Service 12
Troubleshooting 14
Replacement Parts 15
Warranty 16

Record Product Information

Before setting up and operating your new equipment, please locate the model plate on the equipment and record the information in the provided area to the right. You can locate the model plate by standing at the operator's position and looking down at the right rear of the snowthrower. This information will be necessary, should you seek technical support via our web site, Customer Support Department, or with a local authorized service dealer.

MODEL NUMBER

SERIAL NUMBER

Customer Support

Please do NOT return the unit to the retailer or dealer without first contacting our Customer Support Department.

If you have difficulty assembling this product or have any questions regarding the controls, operation, or maintenance of this unit, you can seek help from the experts. Choose from the options below:

◊ Visit us on the web at www.mtdproducts.com

◊ Call a Customer Support Representative at (800) 800-7310 or (330) 220-4683

◊ Write us at MTD LLC • P.O. Box 361131 • Cleveland, OH • 44136-0019

Important Safe Operation Practices

2

WARNING! This symbol points out important safety instructions which, if not followed, could endanger the personal safety and/or property of yourself and others. Read and follow all instructions in this manual before attempting to operate this machine. Failure to comply with these instructions may result in personal injury.
When you see this symbol. **HEED ITS WARNING!**

CALIFORNIA PROPOSITION 65

WARNING! Engine Exhaust, some of its constituents, and certain vehicle components contain or emit chemicals known to State of California to cause cancer and birth defects or other reproductive harm.

DANGER: This machine was built to be operated according to the safe operation practices in this manual. As with any type of power equipment, carelessness or error on the part of the operator can result in serious injury. This machine is capable of amputating fingers, hands, toes and feet and throwing foreign objects. Failure to observe the following safety instructions could result in serious injury or death.

Training

1. Read, understand, and follow all instructions on the machine and in the manual(s) before attempting to assemble and operate. Keep this manual in a safe place for future and regular reference and for ordering replacement parts.
2. Be familiar with all controls and their proper operation. Know how to stop the machine and disengage them quickly.
3. Never allow children under 14 years of age to operate this machine. Children 14 and over should read and understand the instructions and safe operation practices in this manual and on the machine and be trained and supervised by an adult.
4. Never allow adults to operate this machine without proper instruction.
5. Thrown objects can cause serious personal injury. Plan your snow-throwing pattern to avoid discharge of material toward roads, bystanders and the like.
6. Keep bystanders, pets and children at least 75 feet from the machine while it is in operation. Stop machine if anyone enters the area.
7. Exercise caution to avoid slipping or falling, especially when operating in reverse.

Preparation

Thoroughly inspect the area where the equipment is to be used. Remove all doormats, newspapers, sleds, boards, wires and other foreign objects, which could be tripped over or thrown by the auger/impeller.

1. Always wear safety glasses or eye shields during operation and while performing an adjustment or repair to protect your eyes. Thrown objects which ricochet can cause serious injury to the eyes.
2. Do not operate without wearing adequate winter outer garments. Do not wear jewelry, long scarves or other loose clothing, which could become entangled in moving parts. Wear footwear which will improve footing on slippery surfaces.
3. Use a grounded three-wire extension cord and receptacle for all machines with electric start engines.
4. Disengage all control levers before starting the engine.
5. Never attempt to make any adjustments while engine is running, except where specifically recommended in the operator's manual.
6. Let engine and machine adjust to outdoor temperature before starting to clear snow.

Safe Handling of Gasoline

To avoid personal injury or property damage use extreme care in handling gasoline. Gasoline is extremely flammable and the vapors are explosive. Serious personal injury can occur when gasoline is spilled on yourself or your clothes which can ignite. Wash your skin and change clothes immediately.

a. Use only an approved gasoline container.

b. Extinguish all cigarettes, cigars, pipes and other sources of ignition.

c. Never fuel machine indoors.

d. Never remove gas cap or add fuel while the engine is hot or running.

e. Allow engine to cool at least two minutes before refueling.

f. Never over fill fuel tank. Fill tank to no more than ½ inch below bottom of filler neck to provide space for fuel expansion.

g. Replace gasoline cap and tighten securely.

h. If gasoline is spilled, wipe it off the engine and equipment. Move machine to another area. Wait 5 minutes before starting the engine.

i. Never store the machine or fuel container inside where there is an open flame, spark or pilot light (e.g. furnace, water heater, space heater, clothes dryer etc.).

j. Allow machine to cool at least 5 minutes before storing.

k. Never fill containers inside a vehicle or on a truck or trailer bed with a plastic liner. Always place containers on the ground away from your vehicle before filling.

l. If possible, remove gas-powered equipment from the truck or trailer and refuel it on the ground. If this is not possible, then refuel such equipment on a trailer with a portable container, rather than from a gasoline dispenser nozzle.

m. Keep the nozzle in contact with the rim of the fuel tank or container opening at all times until fueling is complete. Do not use a nozzle lock-open device.

Operation

1. Do not put hands or feet near rotating parts, in the auger/impeller housing or chute assembly. Contact with the rotating parts can amputate hands and feet.
2. The auger/impeller control lever is a safety device. Never bypass its operation. Doing so makes the machine unsafe and may cause personal injury.
3. The control levers must operate easily in both directions and automatically return to the disengaged position when released.
4. Never operate with a missing or damaged chute assembly. Keep all safety devices in place and working.
5. Never run an engine indoors or in a poorly ventilated area. Engine exhaust contains carbon monoxide, an odorless and deadly gas.
6. Do not operate machine while under the influence of alcohol or drugs.
7. Muffler and engine become hot and can cause a burn. Do not touch. Keep children away.
8. Exercise extreme caution when operating on or crossing gravel surfaces. Stay alert for hidden hazards or traffic.
9. Exercise caution when changing direction and while operating on slopes. Do not operate on steep slopes.
10. Plan your snow-throwing pattern to avoid discharge towards windows, walls, cars etc. Thus, avoiding possible property damage or personal injury caused by a ricochet.
11. Never direct discharge at children, bystanders and pets or allow anyone in front of the machine.
12. Do not overload machine capacity by attempting to clear snow at too fast of a rate.
13. Never operate this machine without good visibility or light. Always be sure of your footing and keep a firm hold on the handles. Walk, never run.
14. Disengage power to the auger/impeller when transporting or not in use.
15. Never operate machine at high transport speeds on slippery surfaces. Look down and behind and use care when backing up.
16. If the machine should start to vibrate abnormally, stop the engine, disconnect the spark plug wire and ground it against the engine. Inspect thoroughly for damage. Repair any damage before starting and operating.
17. Disengage all control levers and stop engine before you leave the operating position (behind the handles). Wait until the auger/impeller comes to a complete stop before unclogging the chute assembly, making any adjustments, or inspections.
18. Never put your hand in the discharge or collector openings. Do not unclog chute assembly while engine is running. Shut off engine and remain behind handles until all moving parts have stopped before unclogging.
19. Use only attachments and accessories approved by the manufacturer (e.g. wheel weights, tire chains, cabs etc.).
20. When starting engine, pull cord slowly until resistance is felt, then pull rapidly. Rapid retraction of starter cord (kickback) will pull hand and arm toward engine faster than you can let go. Broken bones, fractures, bruises or sprains could result.
21. If situations occur which are not covered in this manual, use care and good judgment. Contact Customer Support for assistance and the name of your nearest servicing dealer.

Clearing a Clogged Discharge Chute

Hand contact with the rotating impeller inside the discharge chute is the most common cause of injury associated with snow throwers. Never use your hand to clean out the discharge chute.

To clear the chute:

1. SHUT THE ENGINE OFF!
2. Wait 10 seconds to be sure the impeller blades have stopped rotating.
3. Always use a clean-out tool, not your hands.

Maintenance & Storage

1. Never tamper with safety devices. Check their proper operation regularly. Refer to the maintenance and adjustment sections of this manual.
2. Before cleaning, repairing, or inspecting machine disengage all control levers and stop the engine. Wait until the auger/impeller come to a complete stop. Disconnect the spark plug wire and ground against the engine to prevent unintended starting.
3. Check bolts and screws for proper tightness at frequent intervals to keep the machine in safe working condition. Also, visually inspect machine for any damage.
4. Do not change the engine governor setting or over-speed the engine. The governor controls the maximum safe operating speed of the engine.
5. Snow thrower shave plates and skid shoes are subject to wear and damage. For your safety protection, frequently check all components and replace with original equipment manufacturer's (OEM) parts only. "Use of parts which do not meet the original equipment specifications may lead to improper performance and compromise safety!"
6. Check control levers periodically to verify they engage and disengage properly and adjust, if necessary. Refer to the adjustment section in this operator's manual for instructions.
7. Maintain or replace safety and instruction labels, as necessary.
8. Observe proper disposal laws and regulations for gas, oil, etc. to protect the environment.
9. Prior to storing, run machine a few minutes to clear snow from machine and prevent freeze up of auger/impeller.
10. Never store the machine or fuel container inside where there is an open flame, spark or pilot light such as a water heater, furnace, clothes dryer etc.
11. Always refer to the operator's manual for proper instructions on off-season storage.
12. Check fuel line, tank, cap, and fittings frequently for cracks or leaks. Replace if necessary.
13. Do not crank engine with spark plug removed.
14. According to the Consumer Products Safety Commission (CPSC) and the U.S. Environmental Protection Agency (EPA), this product has an *Average Useful Life* of seven (7) years, or 60 hours of operation. At the end of the *Average Useful Life* have the machine inspected annually by an authorized service dealer to ensure that all mechanical and safety systems are working properly and not worn excessively. Failure to do so can result in accidents, injuries or death.

Do not modify engine

To avoid serious injury or death, do not modify engine in any way. Tampering with the governor setting can lead to a runaway engine and cause it to operate at unsafe speeds. Never tamper with factory setting of engine governor.

Notice Regarding Emissions

Engines which are certified to comply with California and federal EPA emission regulations for SORE (Small Off Road Equipment) are certified to operate on regular unleaded gasoline, and may include the following emission control systems: Engine Modification (EM), Oxidizing Catalyst (OC), Secondary Air Injection (SAI) and Three Way Catalyst (TWC) if so equipped.

Spark Arrestor



WARNING! This machine is equipped with an internal combustion engine and should not be used on or near any unimproved forest-covered, brush covered or grass-covered land unless the engine's exhaust system is equipped with a spark arrestor meeting applicable local or state laws (if any).

If a spark arrestor is used, it should be maintained in effective working order by the operator. In the State of California the above is required by law (Section 4442 of the California Public Resources Code). Other states may have similar laws. Federal laws apply on federal lands.
A spark arrestor for the muffler is available through your nearest engine authorized service dealer or contact the service department, P.O. Box 361131 Cleveland, Ohio 44136-0019.

Safety Symbols

This page depicts and describes safety symbols that may appear on this product. Read, understand, and follow all instructions on the machine before attempting to assemble and operate.

Symbol	Description
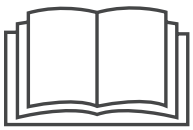	READ THE OPERATOR'S MANUAL(S) Read, understand, and follow all instructions in the manual(s) before attempting to assemble and operate
	WARNING— ROTATING BLADES Keep hands out of inlet and discharge openings while machine is running. There are rotating blades inside
	WARNING— ROTATING BLADES Keep hands out of inlet and discharge openings while machine is running. There are rotating blades inside
	WARNING— ROTATING AUGER Do not put hands or feet near rotating parts, in the auger/impeller housing or chute assembly. Contact with the rotating parts can amputate hands and feet.
	WARNING—THROWN OBJECTS This machine may pick up and throw and objects which can cause serious personal injury.
	WARNING—GASOLINE IS FLAMMABLE Allow the engine to cool at least two minutes before refueling.
	WARNING— CARBON MONOXIDE Never run an engine indoors or in a poorly ventilated area. Engine exhaust contains carbon monoxide, an odorless and deadly gas.
	WARNING— ELECTRICAL SHOCK Do not use the engine's electric starter in the rain
	WARNING— HOT SURFACE Engine parts, especially the muffler, become extremely hot during operation. Allow engine and muffler to cool before touching.



WARNING! Your Responsibility—Restrict the use of this power machine to persons who read, understand and follow the warnings and instructions in this manual and on the machine.

SAVE THESE INSTRUCTIONS!

Assembly & Set-Up

3

Contents of Carton

- One Snow Thrower
- One Chute Assembly
- One 20 oz. Bottle 5W-30 Oil
- One Snow Thrower Operator's Manual
- Two Ignition Keys
- One Engine Operator's Manual

NOTE: This Operator's Manual covers several models. Snow thrower features may vary by model. Not all features in this manual are applicable to all snow thrower models and the snow thrower depicted may differ from yours.

NOTE: All references to the left or right side of the snow thrower are from the operator's position. Any exceptions will be noted.

Assembly

Positioning the Upper Handle

1. Remove the wing knob and carriage bolt from the top of the lower handle. See Fig. 3-1. It is not necessary to remove the shoulder screw and flange lock nut below the wing knob and carriage bolt.

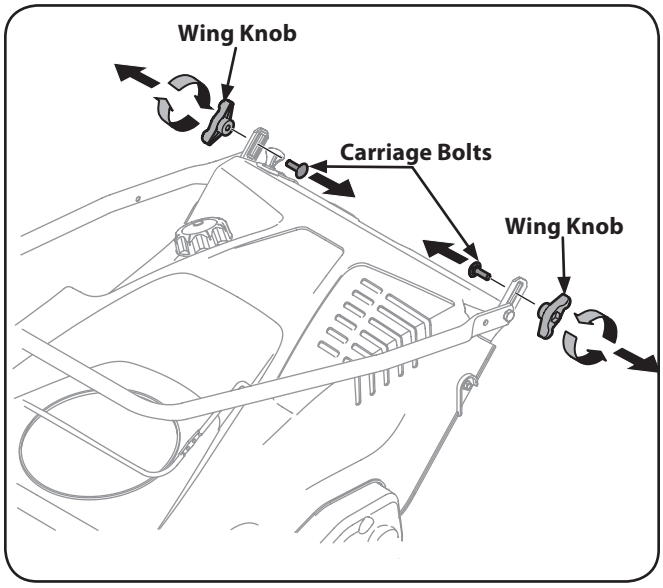

Figure 3-1

2. Pivot the upper handle into the operating position. Be sure not to pinch any of the cables in the process. See Fig. 3-2.

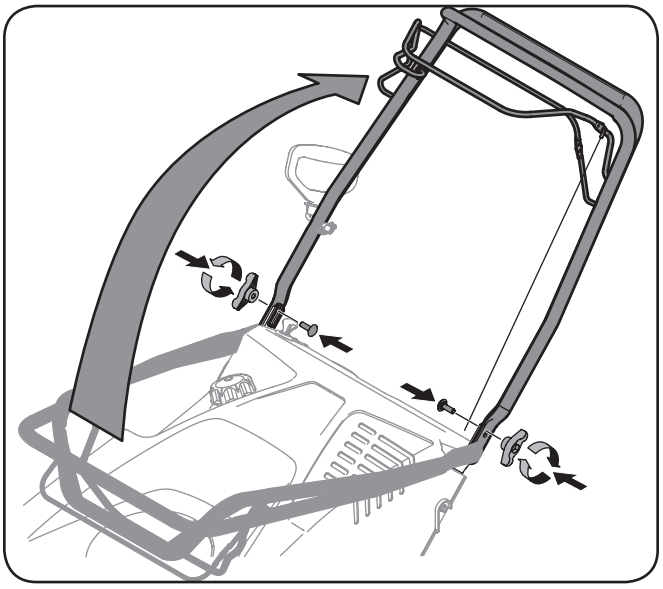

Figure 3-2

Installing the Chute

1. Remove the hex washer screws in the chute base. See Fig. 3-3.

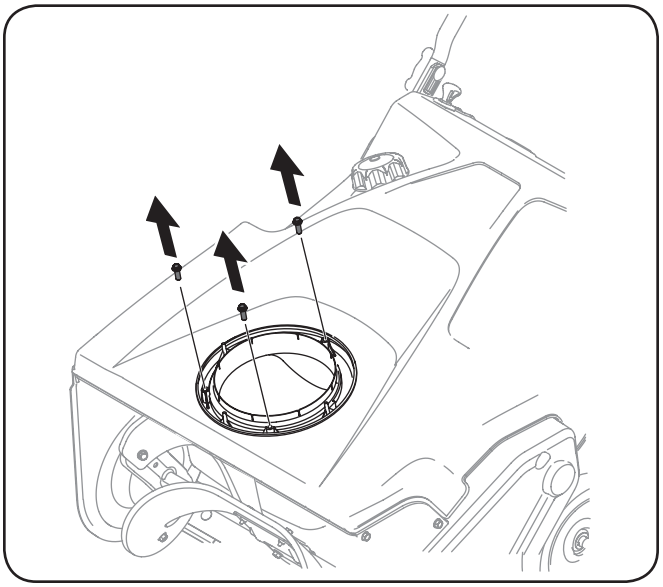

Figure 3-3

2. Align the holes in the chute base with the holes in the lower chute and secure with the previously removed hex washer screws. See Fig. 3-4.

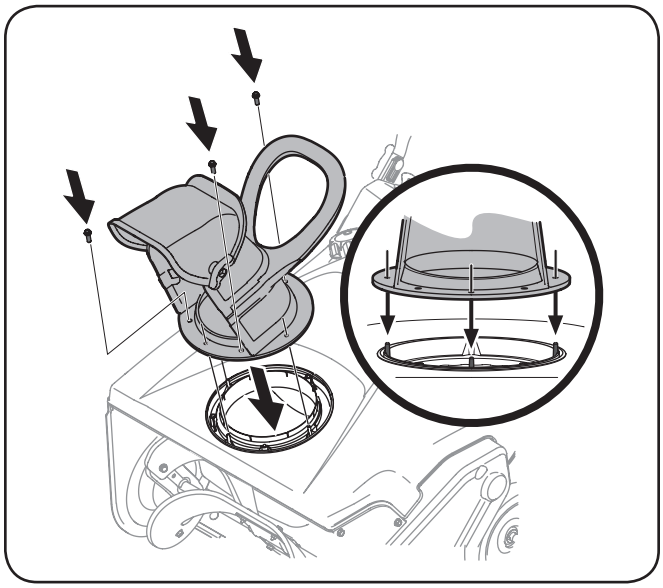

Figure 3-4

Installing the Recoil Starter Handle

On some models it may be necessary to install the recoil starter handle. If your handle is not pre-installed follow the directions below to install it.

1. Remove the eye bolt and handle knob from the manual bag.
2. Place the eye bolt and handle knob on the upper handle as shown in Fig. 3-7. Do not fully tighten the hardware until instructed to do so.

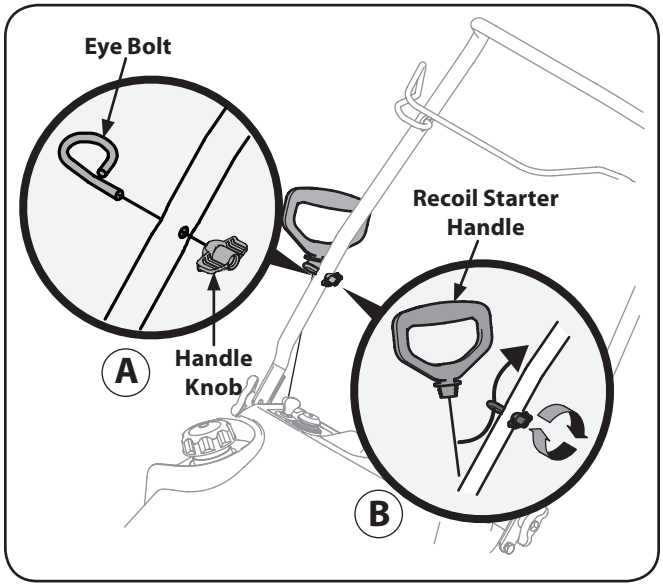

Figure 3-7

NOTE: The opening of the eye bolt should face toward the back of the snow thrower.

3. Slowly pull the recoil starter handle up towards the eye bolt.
4. Slip the recoil starter rope into the eye bolt from the back of the snow thrower. See Fig. 3-7.
5. Securely tighten the eye bolt and handle knob.

Set-Up

Adding Oil

Refer to the Engine Operator's Manual packed with your snow thrower for information on adding and checking oil.

Adding Fuel

Refer to the Engine Operator's Manual packed with your snow thrower for information on adding fuel.

Controls & Features

4

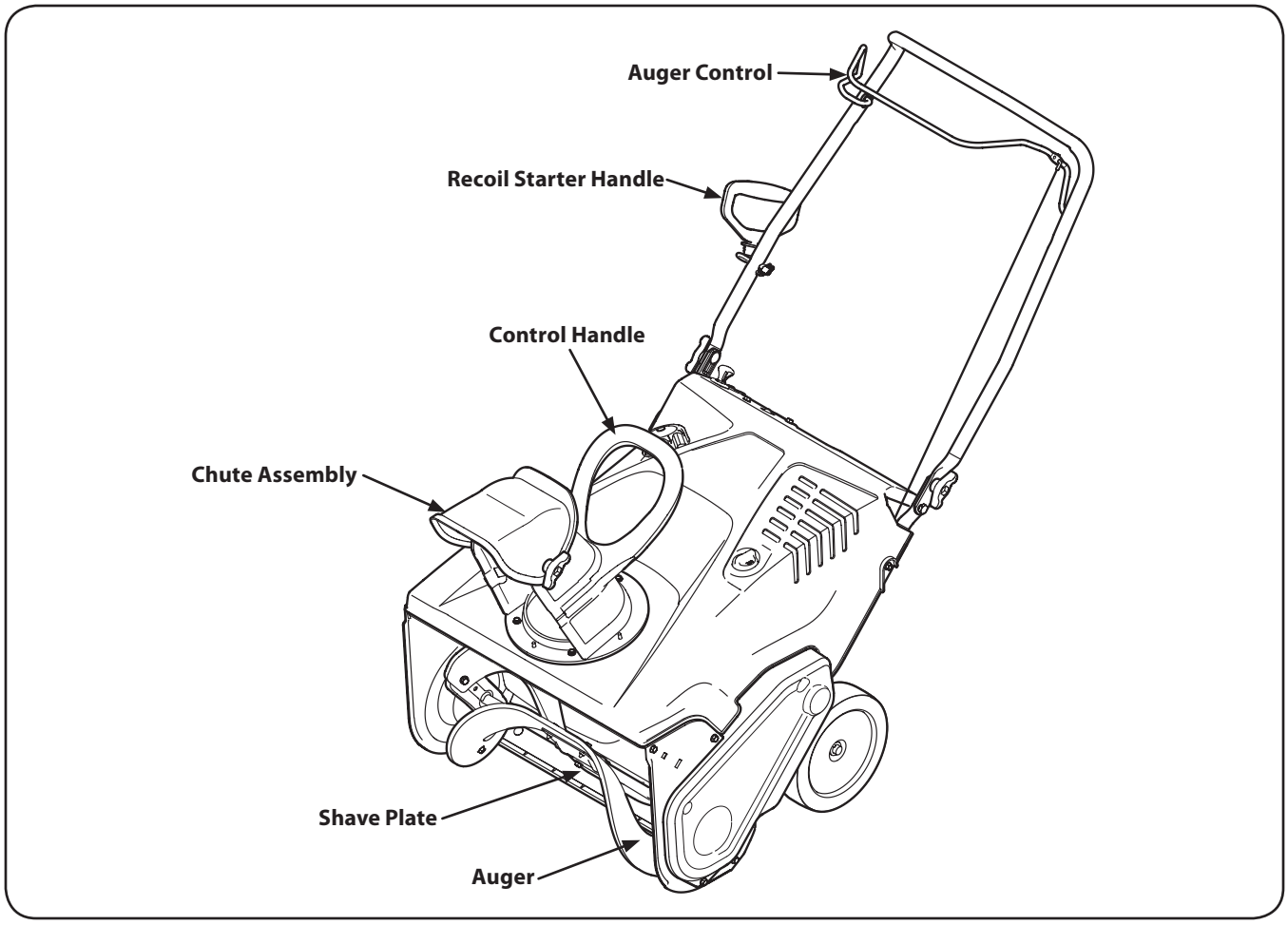

Figure 4-1

NOTE: This Operator's Manual covers several models. Snow thrower features may vary by model. Not all features in this manual are applicable to all snow thrower models and the snow thrower depicted may differ from yours.

Engine Controls

See the Engine Operator's Manual for the location and function of the controls on the engine.

Auger

When engaged, the auger rotation draws snow into the auger housing and throws it out the discharge chute. Rubber paddles on the auger also aid in propelling the snow thrower as they come in contact with the pavement.

Auger Control

Located on the upper handle, the auger control is used to engage and disengage drive to the auger. Squeeze the control against the upper handle to engage the auger; release it to disengage.

Chute Assembly

Rotate the discharge chute to the left or right using the chute handle. The pitch of the discharge chute controls the angle at which the snow is thrown. Loosen the wing knob on the side of the discharge chute before pivoting the discharge chute upward or downward. Retighten the knob once the desired position has been achieved.

Shave Plate

The shave plate maintains contact with the pavement as the snow thrower is propelled, allowing snow close to the pavement's surface to be discharged.

Recoil Starter Handle

The recoil starter handle is used to manually start the engine.

Operation

5

Starting & Stopping the Engine

WARNING! Always keep hands and feet clear of moving parts. Do not use a pressurized starting fluid. Vapors are flammable.

Refer to the Engine Operator's manual packed with your unit for instructions on starting and stopping the engine.

Engaging the Auger

To engage the auger and start throwing snow, squeeze the auger control against the handle. Release to stop the auger.

Engaging the Drive

Lift up slightly on the handle to allow the rubber paddles on the auger to contact the pavement and propel the snow thrower forward. Pushing downward on the handle will raise the auger off the ground and stop the forward motion.

NOTE: Excessive upward pressure on the handle will result in premature wear on the rubber auger blades which are not be covered by the warranty.

Adjusting the Chute

1. Rotate the discharge chute to the left or right using the chute handle. See Fig. 5-1.

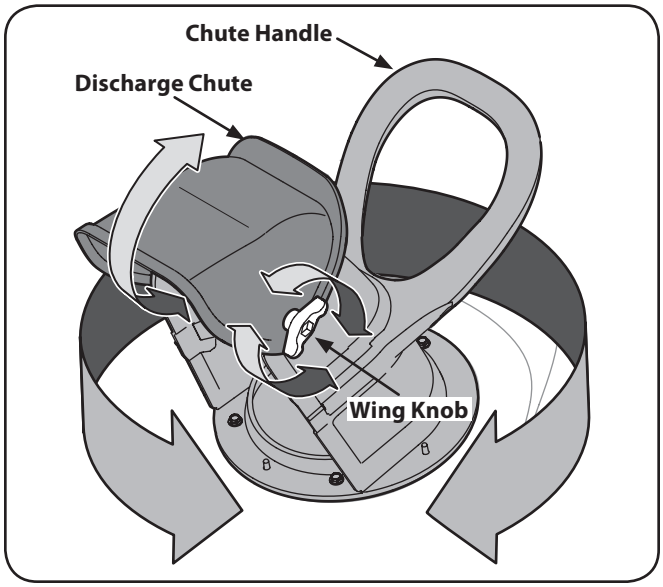

Figure 5-1

2. To adjust the pitch, loosen the wing knob on the side of the discharge chute and pivot the discharge chute upward or downward. Retighten the knob once the desired position has been achieved. See Fig. 5-1.

Clearing a Clogged Discharge Chute

WARNING! Never use your hands to clear a clogged chute assembly. Shut off engine and remain behind handles until all moving parts have stopped before using the clean-out tool to clear the chute assembly.

Hand contact with the rotating impeller inside the discharge chute is the most common cause of injury associated with snow throwers. Never use your hand to clean out the discharge chute.

To clear the chute:

1. SHUT THE ENGINE OFF!
2. Wait 10 seconds to be sure the impeller blades have stopped rotating.
3. Always use a clean-out tool, not your hands.

Maintenance & Adjustments

6

Adjustments

WARNING! Before Servicing, repairing or inspecting the snow thrower, disengage the auger control. Stop the engine and remove the key to prevent unintended starting.

Shave Plate

To check the adjustment of the shave plate, place the machine on a level surface. The wheels, shave plate and auger should all contact the level surface. Note that if the shave plate is adjusted too high, snow may blow under the housing. If the shave plate wears out excessively, or the snow thrower does not self-propel, the shave plate may be too low and needs to be adjusted.

NOTE: On new snow throwers or machines with a new shave plate installed, the auger may be slightly off the ground.

To adjust the shave plate proceed as follows:

1. Drain the gas from the snow thrower.
2. Pull the starter cord until resistance is felt. Then tip the snow thrower back until it rests on the handles.
3. Loosen the four flange lock nuts and carriage screws which secure the shave plate to the housing. See Fig. 6-1. Move the shave plate to the desired position and retighten the flange lock nuts and carriage screws securely.

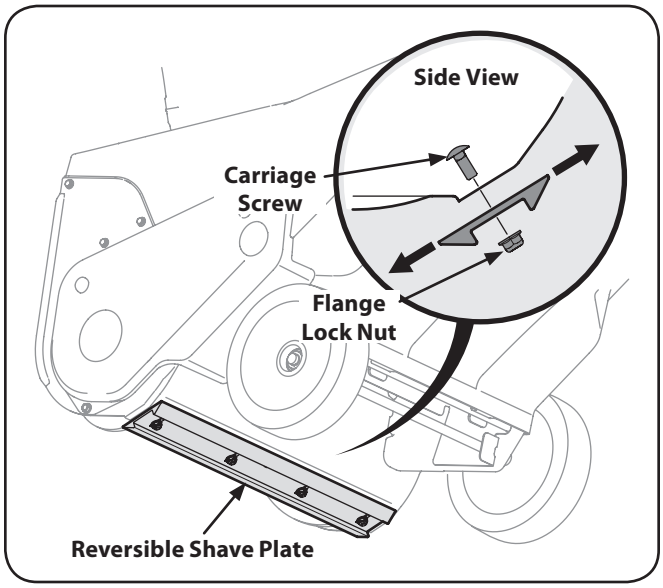

Figure 6-1

4. Tip the snow thrower back to the operating position and pull the starter handle a few times to see if it is difficult to pull.
5. If the starter is difficult to pull, remove the spark plug and pull the handle several times to ensure that any oil trapped in the head is removed.

CAUTION: Oil may come out of the spark plug hole when it is removed and the starter handle is pulled.

6. Inspect the spark plug. If it is wet, clean off any oil before re-installing.

Control Cable

As a result of both the control cable and the auger drive belt stretching due to wear, periodic adjustments may be necessary. If the auger seems to hesitate when rotating, proceed as follows:

The upper hole in the control handle provides for an adjustment in cable tension. To adjust, disconnect the end of control cable from the bottom hole in the control handle and reinsert it in the upper hole. Insert the cable from the outside as shown in Fig. 6-2.

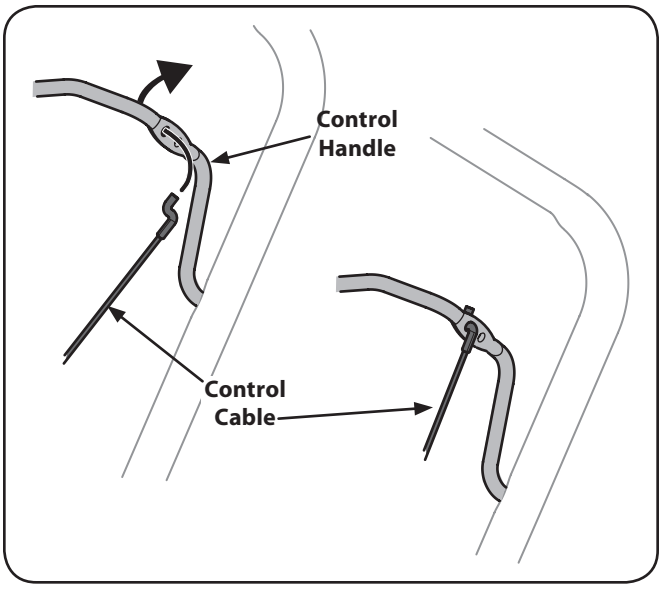

Figure 6-2

Test the snow thrower to see if there is a noticeable difference. If after the adjustment to the control cable the auger still hesitates when rotating, see the Service Section for instructions on replacing the belt.

Chute Assembly

Refer to the Operation section for instructions on adjusting the chute assembly.

Maintenance

Lubrication

Lubricate the pivot points on the control handle and the extension spring at the end of the control cable with a light oil once every season and before the snow thrower is put into storage at the end of the season.

Off-Season Storage

If the snow thrower will not be used for 30 days or longer, follow the instructions below.

1. Store the equipment in a clean, dry area.
2. If storing the snow thrower in an unventilated area, rustproof the machine using a light oil or silicone to coat the snow thrower.
3. Clean the exterior of the engine and the snow thrower.
4. Lubricate pivot points on control handle and extension spring at end of control cable with a light oil.

Replacing Belt

1. Run the snow thrower until the fuel tank is empty.
2. Pull the recoil starter handle until resistance is felt. Then tip the snow thrower back until it rests on the handles.
3. Slide a board up through the auger and through the chute to secure the auger in place.
4. Remove the belt cover by removing the two hex washer screws and one hex lock screw that secure it to the frame. See Fig. 7-1.

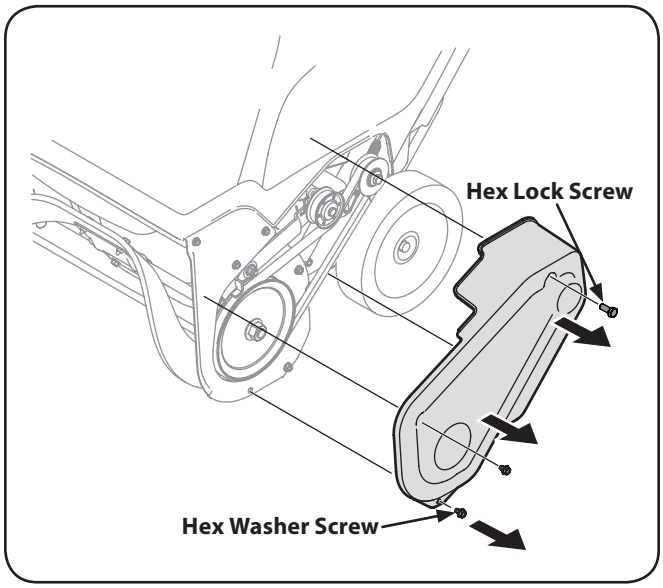

Figure 7-1

5. Remove the flange nut that secures the auger pulley to the auger shaft. See Fig. 7-2.

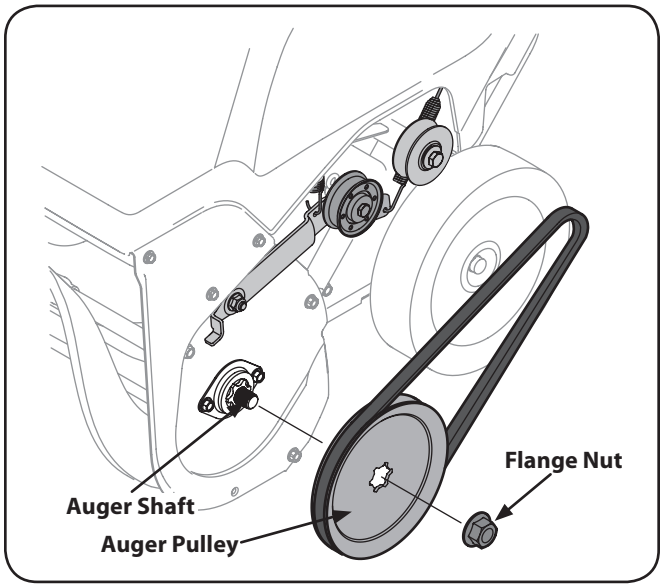

Figure 7-2

Remove the auger pulley and the belt.

To replace the belt follow these instructions and refer to Fig. 7-3:

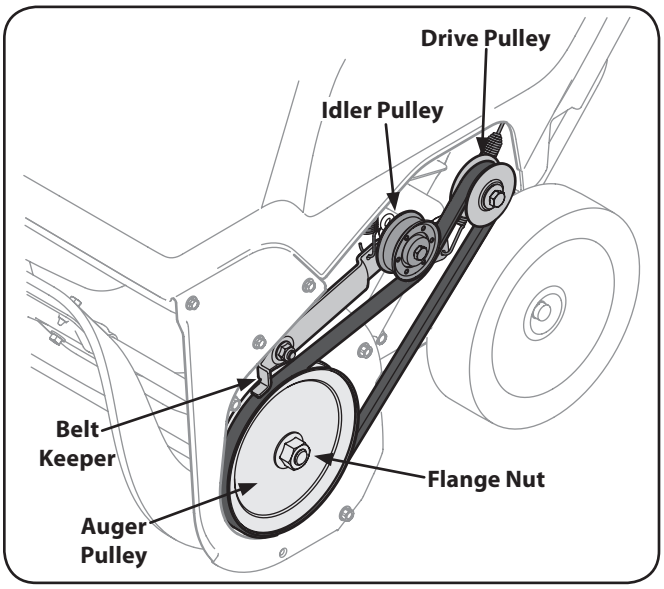

Figure 7-3

1. Route the belt around the drive pulley and under the idler pulley.
2. Route the end of the belt around the auger pulley and slide the pulley back on to the auger shaft. It may be necessary to push down on the idler pulley to get the auger pulley under the belt keeper.
3. Replace the flange nut and tighten securely.
4. Reinstall the belt cover removed earlier.
5. Remove the board from the auger and chute.

Replacing Auger Paddles

The snow thrower auger's rubber paddles are subject to wear and should be replaced if any signs of excessive wear are present.

CAUTION: Do NOT allow the auger's rubber paddles to wear to the point where portions of the metal auger itself can come in contact with the pavement. Doing so can result in serious damage to your snow thrower.

To change the rubber paddles, proceed as follows and refer to Fig. 7-4:

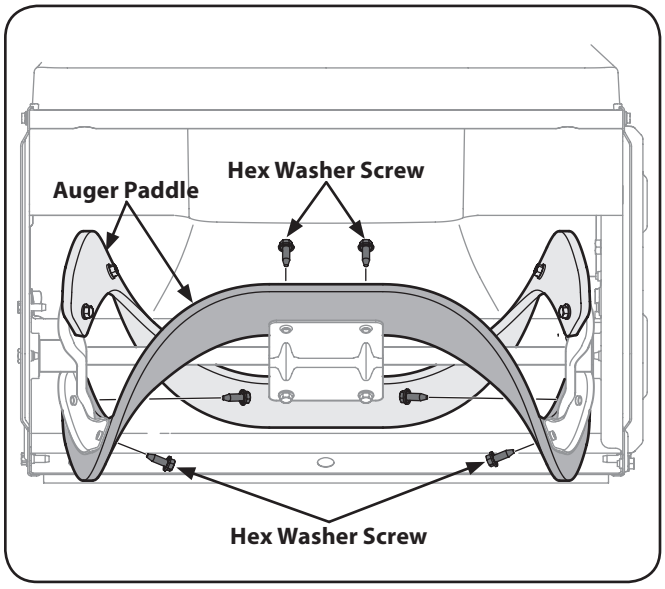

Figure 7-4

1. Run the snow thrower until the fuel tank is empty.
2. Pull the recoil starter handle until resistance is felt. Then tip the snow thrower back until it rests on the handles.
3. Remove the existing rubber paddles by unthreading the hex washer screws which secure them to the auger. See Fig. 7-4.

   NOTE: The auger paddles should be replaced one at a time so that the auger still attached can be used as an example for positioning and re-installing the new auger.
4. Secure the replacement rubber paddles to the auger using the hardware removed earlier.

Replacing Shave Plate

1. The shave plate is attached to the bottom of the auger housing and is subject to wear. It should be checked periodically. There are two wearing edges and the shave plate can be reversed.
2. Run the snow thrower until the fuel tank is empty.
3. Pull the recoil starter handle until resistance is felt. Then tip the snow thrower back until it rests on the handles.
4. Remove the four carriage bolts and flange lock nuts which attach it to the snow thrower housing.
5. Reverse the existing shave plate or install a new one, making sure the new shave plate and the heads of the carriage bolts are on the inside of the housing.
6. Adjust the shave plate as instructed on page 11.
7. Tighten securely once adjusted.

Troubleshooting

9

Problem	Cause	Remedy
Loss of power	1. Spark plug wire loose. 2. Vent in gas cap plugged.	1. Firmly connect spark plug wire. 2. Clear vent.
Excessive vibration	1. Loose parts or damaged auger.	1. Stop engine immediately and disconnect spark plug wire. Check for possible damage. Tighten all bolts and nuts. Repair as needed. If the problem persists, take snow thrower to an authorized service dealer.
Snow thrower fails to self-propel	1. Auger control cable out of adjustment. 2. Auger drive belt loose or damaged.	1. Adjust auger control cable as shown in Maintenance & Adjustments section. 2. Replace auger drive belt.
Augers continue to rotate	1. Auger control cable out of adjustment.	1. Adjust auger control cable as shown in Maintenance & Adjustments section.
Unit fails to discharge snow	1. Chute assembly clogged. 2. Foreign object lodged in auger. 3. Auger control cable out of adjustment. 4. Auger belt loose or damaged.	1. Stop engine and disconnect spark plug wire. Clean chute and inside of auger housing with clean-out tool or stick. 2. Stop engine immediately and disconnect the spark plug wire. Remove object from auger. 3. Adjust auger control cable. 4. Replace auger belt.

Replacement Parts

10

Component	Part Number and Description	
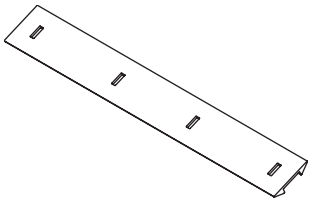	731-08171	Shave Plate
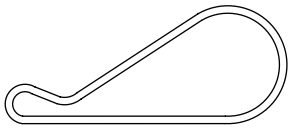	954-04050	Belt V-Type
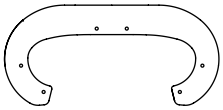	753-06469	Rubber Auger Paddle Kit (Includes 2 paddles and 12 hex washer screws)
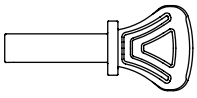	731-05632	Key
	946-04782	Clutch Cable
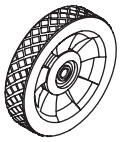	734-04063A 734-04585	Wheel Assembly, 7" (2M1 & 2S1) Wheel Assembly, 8" (2T5)

Phone (800) 800-7310 to order replacement parts or a complete Parts Manual (have your full model number and serial number ready). Parts Manual downloads are also available free of charge at www.mtdproducts.com.

MANUFACTURER'S LIMITED WARRANTY FOR



The limited warranty set forth below is given by MTD LLC with respect to new merchandise purchased and used in the United States and/or its territories and possessions, and by MTD Products Limited with respect to new merchandise purchased and used in Canada and/or its territories and possessions (either entity respectively, "MTD").

"MTD" warrants this product (excluding its *Normal Wear Parts and Attachments* as described below) against defects in material and workmanship for a period of two (2) years commencing on the date of original purchase and will, at its option, repair or replace, free of charge, any part found to be defective in materials or workmanship. This limited warranty shall only apply if this product has been operated and maintained in accordance with the Operator's Manual furnished with the product, and has not been subject to misuse, abuse, commercial use, neglect, accident, improper maintenance, alteration, vandalism, theft, fire, water, or damage because of other peril or natural disaster. Damage resulting from the installation or use of any part, accessory or attachment not approved by MTD for use with the product(s) covered by this manual will void your warranty as to any resulting damage.

Normal Wear Parts are warranted to be free from defects in material and workmanship for a period of thirty (30) days from the date of purchase. Normal wear parts include, but are not limited to items such as: batteries, belts, blades, blade adapters, tines, grass bags, wheels, rider deck wheels, seats, snow thrower skid shoes, friction wheels, shave plates, auger spiral rubber, engine oil, air filters, spark plugs and tires.

Attachments — MTD warrants attachments for this product against defects in material and workmanship for a period of one (1) year, commencing on the date of the attachment's original purchase or lease. Attachments include, but are not limited to items such as: grass collectors and mulch kits.

HOW TO OBTAIN PARTS AND SERVICE: Warranty service is available, WITH PROOF OF PURCHASE, through your local authorized service dealer. To locate the dealer in your area:

In the U.S.A.

Check your Yellow Pages, or contact MTD LLC at P.O. Box 361131, Cleveland, Ohio 44136-0019, or call 1-800-800-7310, 1-330-220-4683 or log on to our Web site at www.mtdproducts.com.

In Canada

Contact MTD Products Limited, Kitchener, ON N2G 4J1, or call 1-800-668-1238 or log on to our Web site at www.mtdcanada.com.

This limited warranty does **not** provide coverage in the following cases:

a. Log splitter pumps, valves, and cylinders have a separate one-year warranty.

b. Routine maintenance items such as lubricants, filters, blade sharpening, tune-ups, brake adjustments, clutch adjustments, deck adjustments, and normal deterioration of the exterior finish due to use or exposure.

c. Service completed by someone other than an authorized service dealer.

d. MTD does not extend any warranty for products sold or exported outside of the United States and/or Canada, and their respective possessions and territories, except those sold through MTD's authorized channels of export distribution.

e. Replacement parts that are not genuine MTD parts.

f. Transportation charges and service calls.

g. MTD does not warrant this product for commercial use.

No implied warranty, including any implied warranty of merchantability or fitness for a particular purpose, applies after the applicable period of express written warranty above as to the parts as identified. No other express warranty, whether written or oral, except as mentioned above, given by any person or entity, including a dealer or retailer, with respect to any product, shall bind MTD. During the period of the warranty, the exclusive remedy is repair or replacement of the product as set forth above.

The provisions as set forth in this warranty provide the sole and exclusive remedy arising from the sale. MTD shall not be liable for incidental or consequential loss or damage including, without limitation, expenses incurred for substitute or replacement lawn care services or for rental expenses to temporarily replace a warranted product.

Some states do not allow the exclusion or limitation of incidental or consequential damages, or limitations on how long an implied warranty lasts, so the above exclusions or limitations may not apply to you.

In no event shall recovery of any kind be greater than the amount of the purchase price of the product sold. **Alteration of safety features of the product shall void this warranty.** You assume the risk and liability for loss, damage, or injury to you and your property and/or to others and their property arising out of the misuse or inability to use the product.

This limited warranty shall not extend to anyone other than the original purchaser or to the person for whom it was purchased as a gift.

HOW STATE LAW RELATES TO THIS WARRANTY: This limited warranty gives you specific legal rights, and you may also have other rights which vary from state to state.

IMPORTANT: Owner must present Original Proof of Purchase to obtain warranty coverage.

MTD LLC, P.O. BOX 361131 CLEVELAND, OHIO 44136-0019; Phone: 1-800-800-7310, 1-330-220-4683
MTD Canada Limited - KITCHENER, ON N2G 4J1; Phone 1-800-668-1238

GDOC-100016 REV. C