TROY-BILT®

Illustrated Parts Manual

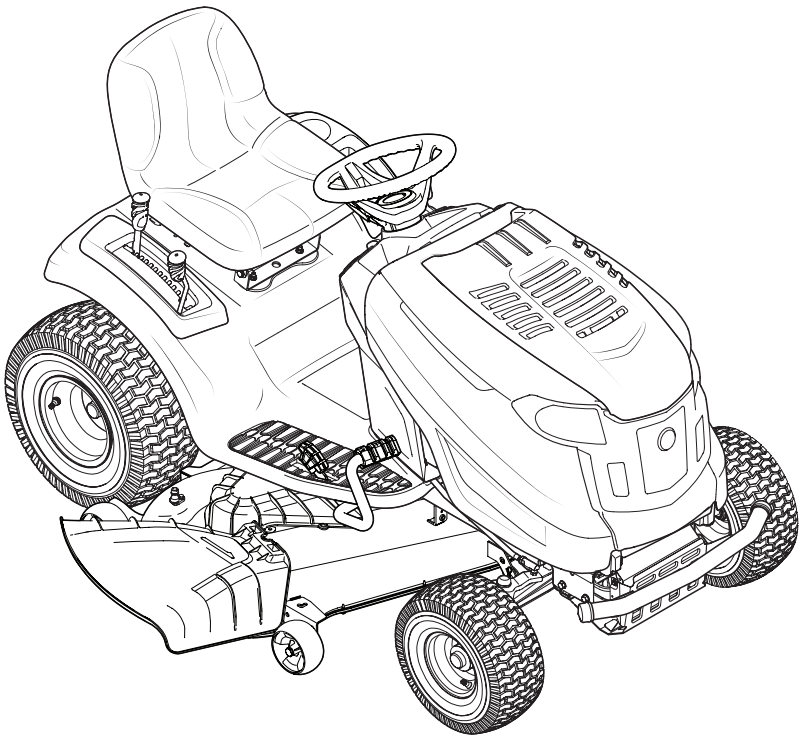

Hydrostatic Lawn Tractor — Super Bronco 50/54

TROY-BILT LLC, P.O. BOX 361131 CLEVELAND, OHIO 44136-0019

Printed In USA

Form No. 769-10225
(October 13, 2014)

To The Owner

Thank You

Thank you for purchasing an MTD Lawn Tractor. It was carefully engineered to provide excellent performance when properly operated and maintained.

All information in this manual is relative to the most recent product information available at the time of printing. Please be aware that this Illustrated Part's Manual may cover a range of product specifications for various models.

Components listed and/or illustrated in this manual may not be applicable to all models. We reserve the right to change product specifications, designs and equipment without notice and without incurring obligation.

Throughout this manual, all references to *right* (RH) and *left* (LH) are observed from the operating position.

Table of Contents

Front and Rear Wheels 4
Electric PTO 5
Steering 6
Frame 8
Seat 10
Front Axle 11
Deck Lift 12
Pedals 13
Fender 14
Hood 16
Fuel Tank and Dash 18
Electrical 20
Drive System 22
50-inch Deck 24
54-inch Deck 26
Engine Accessories 28
Electrical Schematic (Elec. PTO) 29

Record Product Information

To ease in ordering replacement parts, please locate the model plate on the equipment and record the information in the provided area to the right. You can locate the model plate by looking beneath the seat.

Model Number

Serial Number

Painted Parts

When ordering painted service parts, a four digit color suffix must be added to the part number (e.g. 783-XXXXX-0637). Please refer to the table below for current color codes:

0637	Black
0709	Dark Green (Bolens, Yard-Man)
0662	Oyster Gray (MTD Gold)
0638	Red (Yard Machines, Huskee, Troy-Bilt, MTD)
0691	Black Jack (MTD Gold, MasterCut)

0674	Yellow (Yard-Man)
0650	Metallic Red (White Outdoor)
0629	Silver Flake (MTD Platinum)
04038	Day Orange (Daedong)
04033	Flint Mica (Troy-Bilt XP)

This page left intentionally blank.

Front and Rear Wheels

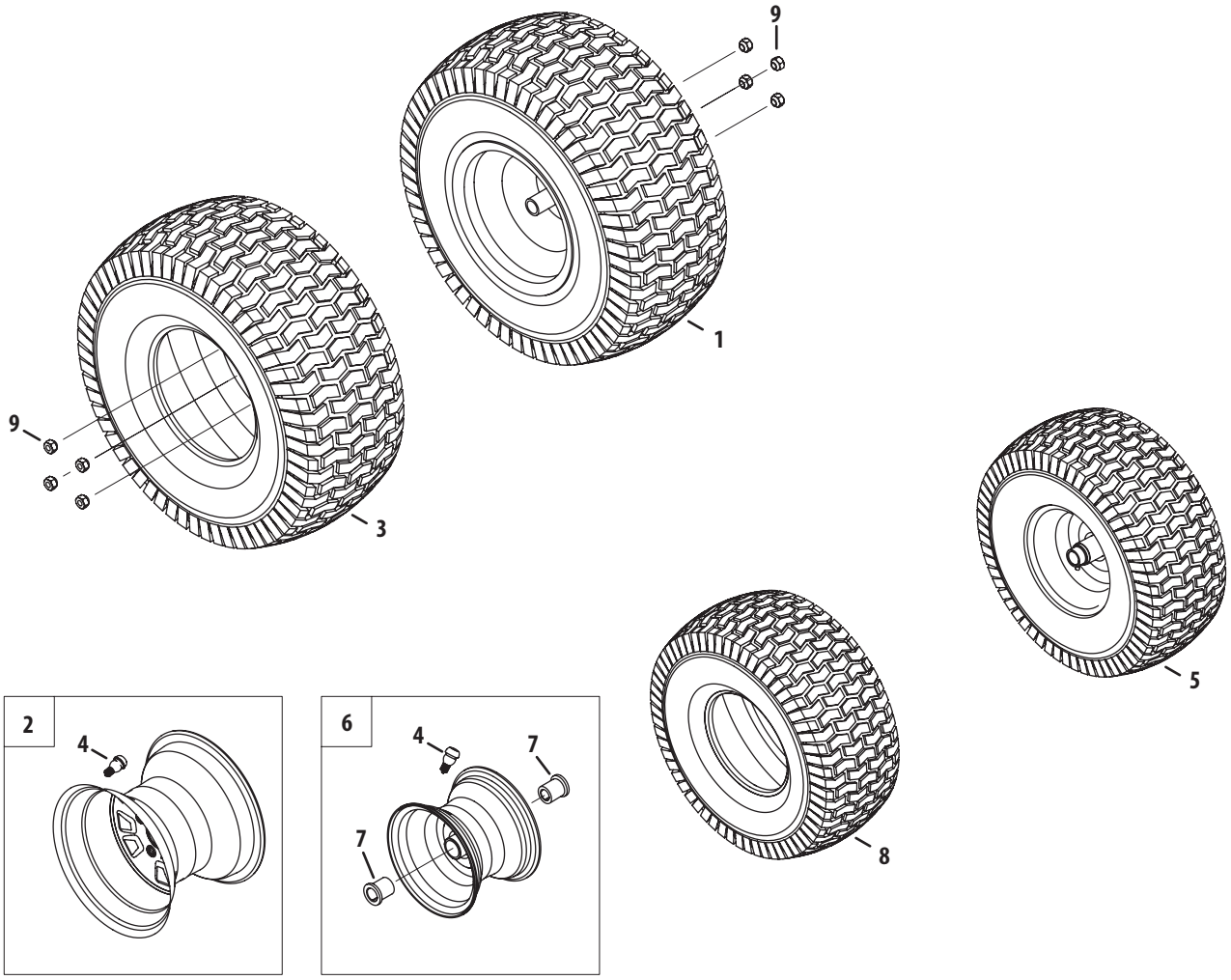

Ref.	Part Number	Description
1.	634-05107-0916	Wheel, Complete, 22 x 9.5 x 12
2.	634-04238-0662	Rim Ass'y, 12.0 x 7.0
3.	734-05065-0906	Tire, 22 x 9.5 x 12 Sq Shoulder
4.	934-0255	Valve, Tubeless Air
5.	634-05082-0916	Wheel, Complete, 16 x 6.5 x 8
6.	634-05083-0662	Rim Ass'y, 8.0 x 5.38
7.	741-05094	Bearing, Flange, .760 ID
8.	734-04641	Tire, 16 x 6.5 x 8 Sq Shoulder
9.	712-3050	Lug Nut 7/16-14

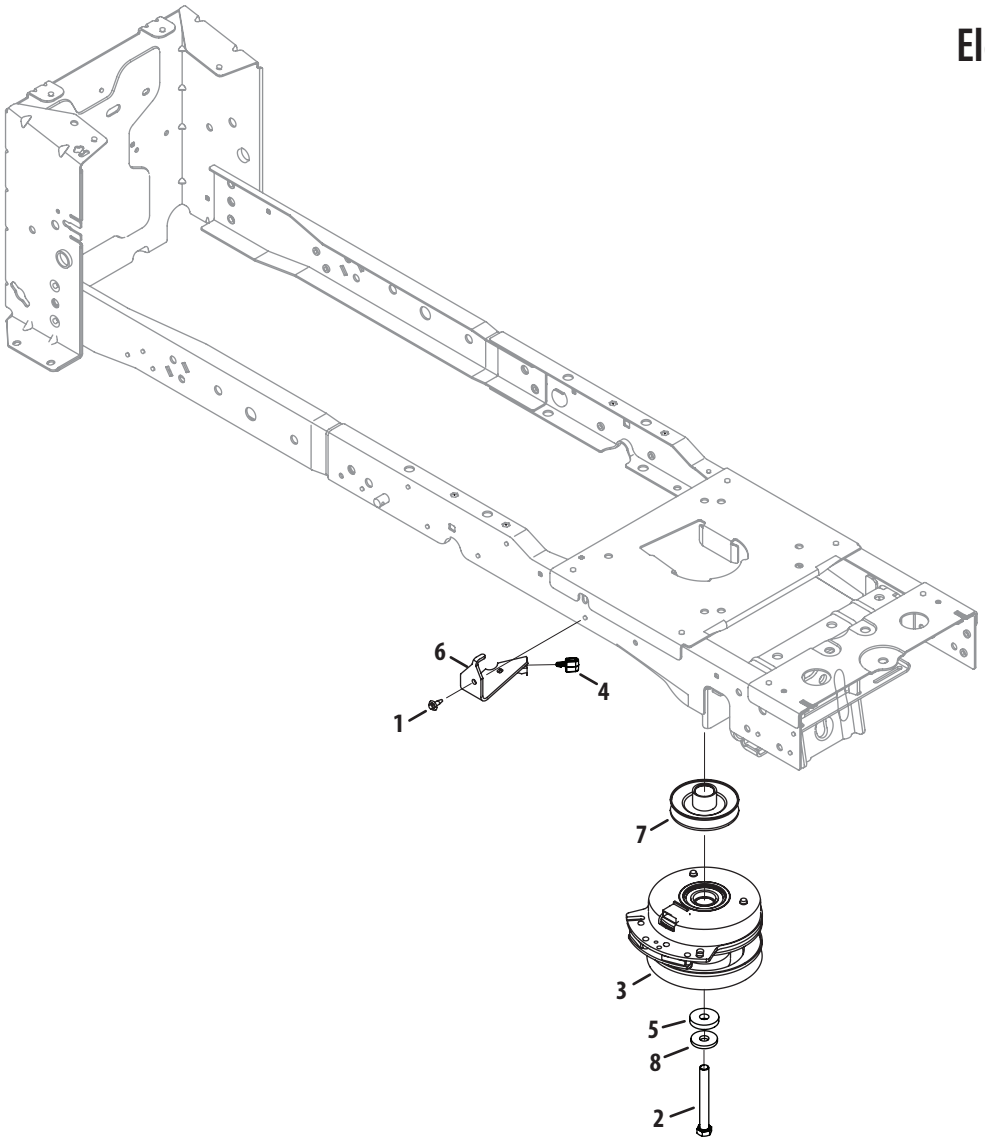

Ref.	Part Number	Description
1.	710-06133	Screw, M6-1 x .625
2.	710-04379A	Hex Cap Screw, 7/16-20 x 3.50
3.	917-05209	Clutch, Electric PTO
4.	731-10576	Grommit
5.	736-05107	Flat Washer, .450 x 1.375 x .250
6.	783-08656	Clutch Bracket
7.	756-05061A	Engine Pulley
8.	736-0322	Flat Washer, .450 x 1.250 x .164

Steering

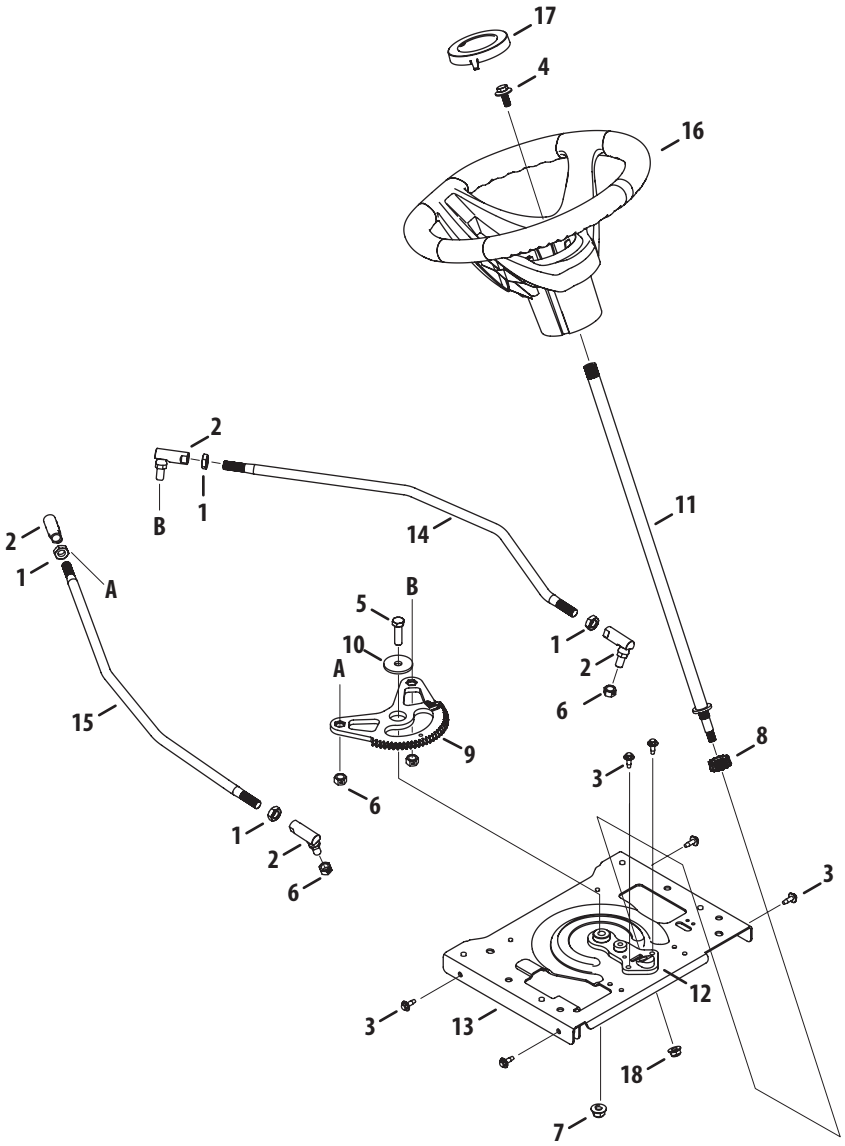

Ref.	Part Number	Description
1.	712-05093	Jam Nut, 7/16-20
2.	723-05009	Ball Joint, 7/16-20, Lock
3.	710-06133	Screw, M6-1 x .625
4.	710-06154A	Screw, 5/16-24 x .850
5.	710-3005	Hex Cap Screw, 3/8-16 x 1.25
6.	912-0214	Nut, Hex Lock, 3/8-24, Grb
7.	712-04065	Nut, Flange Lock, 3/8-16, Grf,
8.	717-05193A	Pinion Gear, 13T
9.	717-05225	Steering Gear
10.	736-04294	Flat Washer, .390 x 2.490 x .119
11.	738-05043	Shaft, Steering, .625 OD x 20
12.	748-05071	Steering Support
13.	783-08386	Steering Mounting Plate
14.	747-06456	Steering Rod, LH
15.	747-06457	Steering Rod, RH
16.	631-05102	Steering Wheel
17.	731-11014	Cap, Steering Wheel
18.	712-04063	Nut, Flange Lock, 5/16-18, Grf

Frame

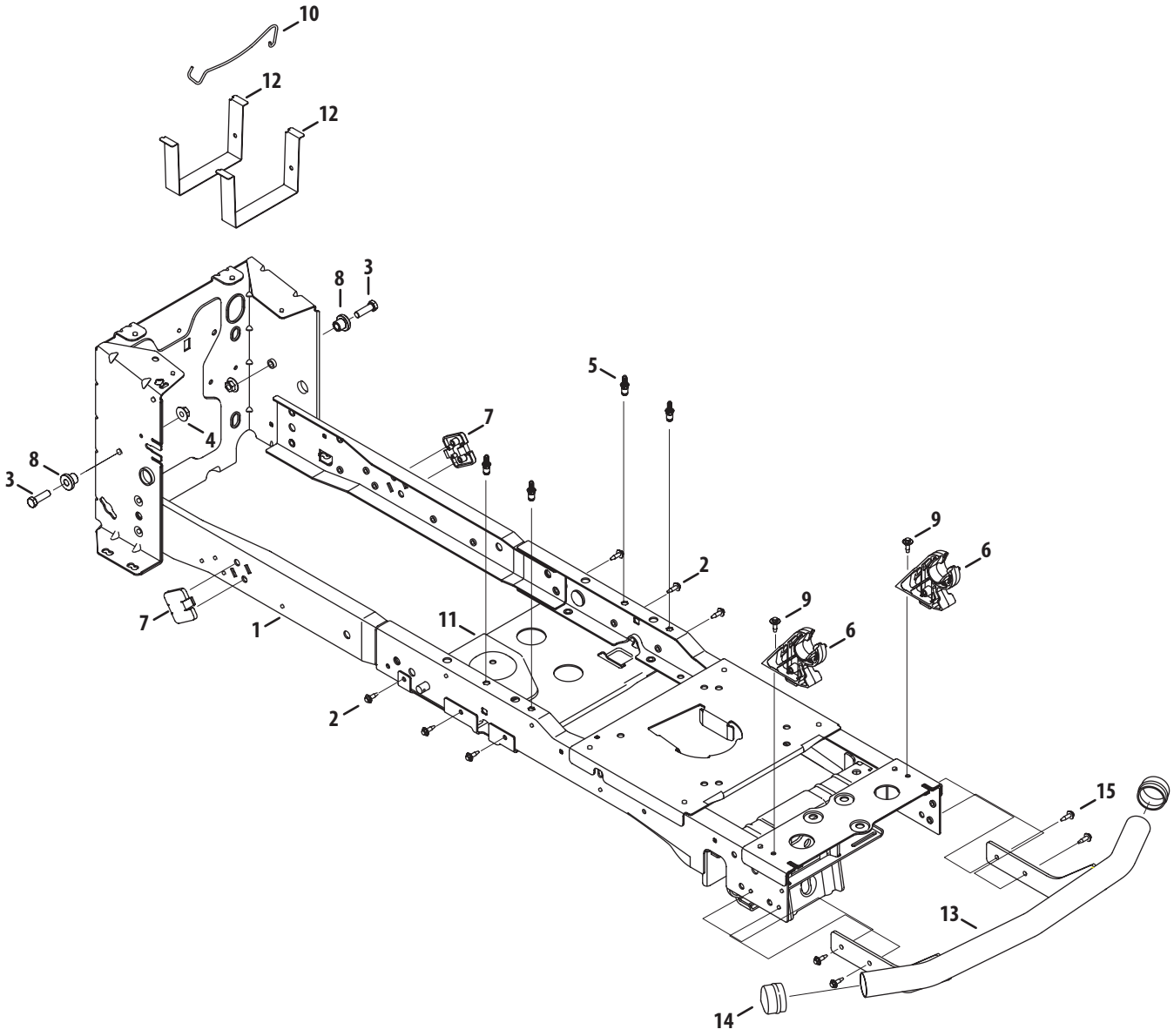

Ref.	Part Number	Description
1.	983-05067	Frame Assembly
2.	710-06133	Screw, M6-1 x .625
3.	710-3005	Hex Cap Screw, 3/8-16 x 1.25
4.	712-04217	Flange Lock Nut, 3/8-16
5.	728-05015	Rivet, 1/4-20 x .750
6.	731-10069A	Pivot Bracket
7.	731-10281	Wear Pad
8.	738-04058	Shoulder Spacer, .38 x 1.0 x .70
9.	738-05090	Shoulder Screw, M6-1
10.	747-06329	Rod, Battery
11.	783-08276	Lower Frame Brace Bracket
12.	783-08567	Battery Bracket
13.	683-05155	Bumper Assenbly
14.	731-05368	Hub Cap
15.	710-06012A	Hex Flange Screw, 3/8-16

Seat

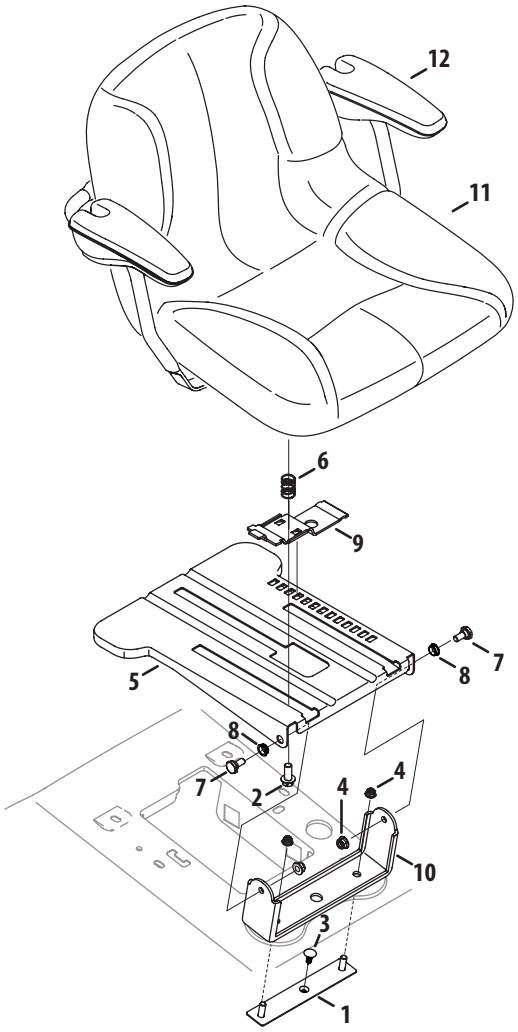

Ref.	Part Number	Description
1.	983-05111A	Seat Pivot Plate Assembly
2.	710-04482	Hex Flange Screw, 3/8/16, .875, Gr5
3.	726-3046	Ratchet Clip
4.	712-04063	Nut, Flange Lock, 5/16-18, Grf
5.	783-08452	Bracket, Mounting, Seat
6.	732-04563	Compression Spring, .68 x 1.065 x .055
7.	938-0140	Shoulder Screw, .435 x .178, 5/16 x .56
8.	741-05128	Flange Bearing, .4385 ID
9.	783-06050	Seat Lever
10.	783-08563	Pivot Bracket, Tall
11.	757-05044	Seat, High
12.	759-04252†	Arm Rest Kit

† If Equipped

Front Axle

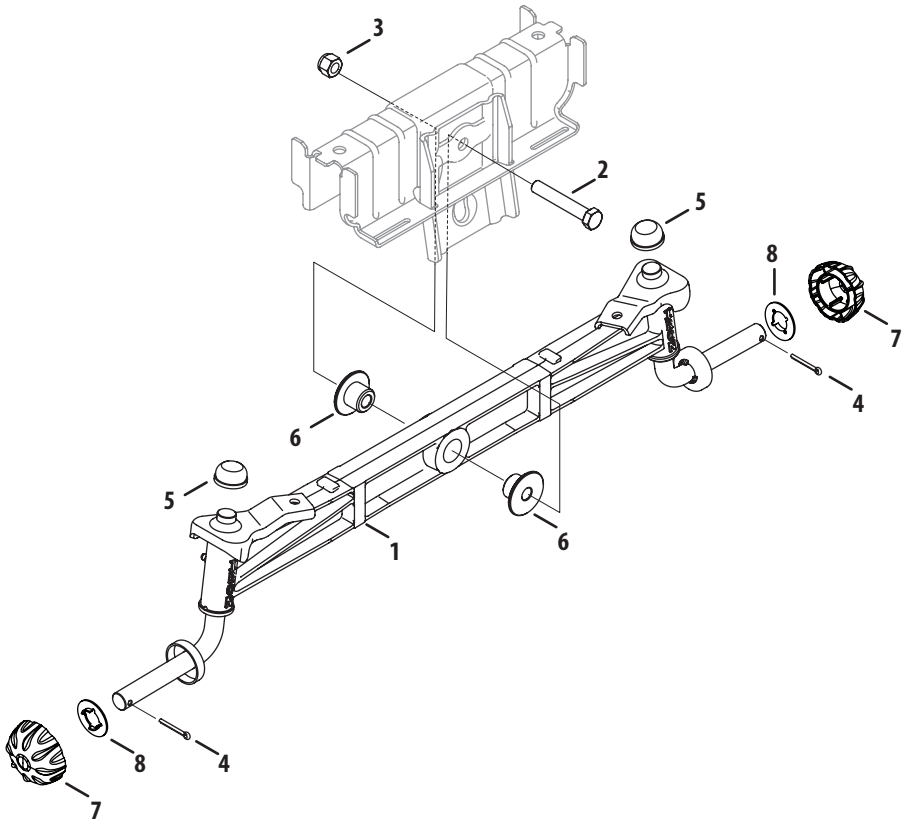

Ref.	Part Number	Description
1.	983-05145	Front Axle Assembly
2.	710-0182	Hex Cap Screw, 1/2-13 x 3.00
3.	712-3083	Nut, Hex Lock, 1/2-13
4.	714-0162	Pin, Cotter, 5/32, 1.25
5.	726-0341	Push Cap, 3/4
6.	738-05056	Shoulder Spacer, 1.00 x .515 x .760
7.	731-2290A	Hub Cap
8.	736-04228A	Washer, Flat, .350 x 1.559 x .062

Deck Lift

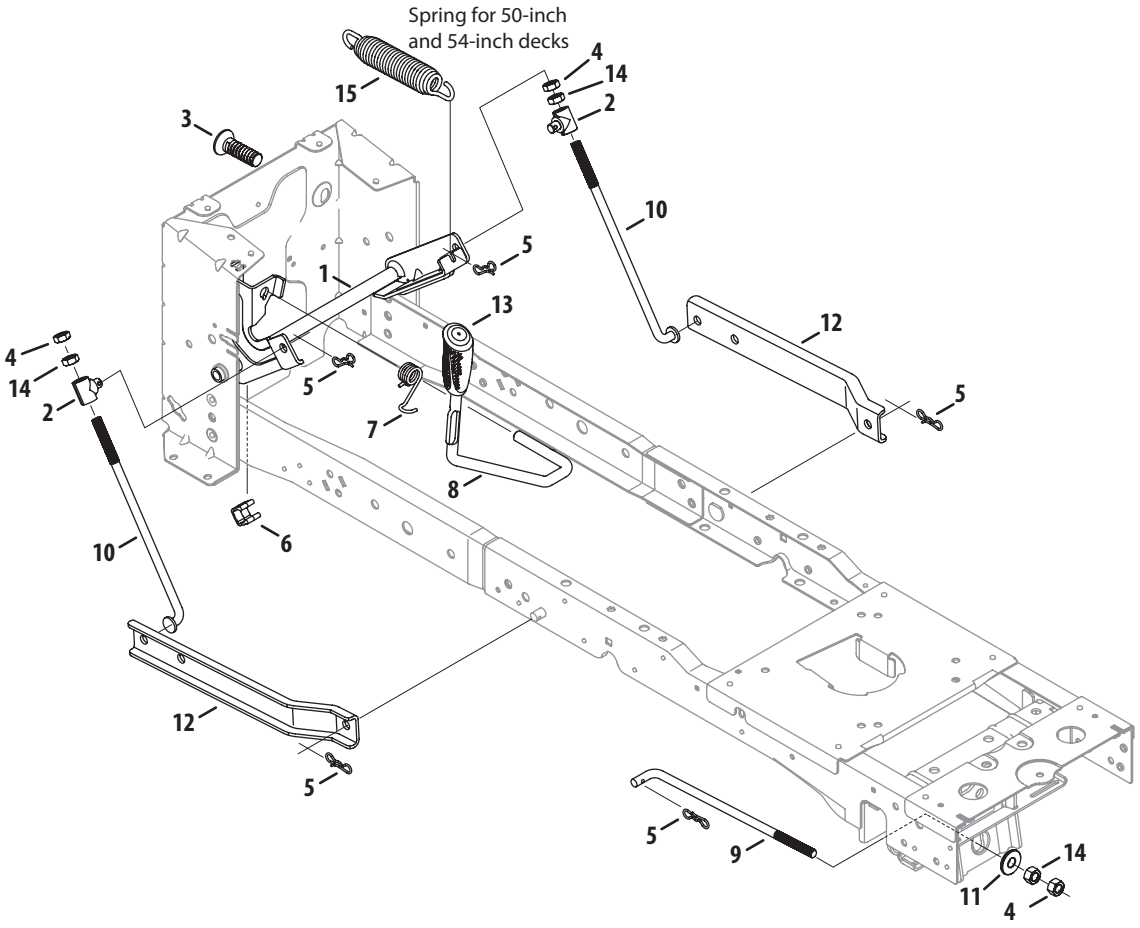

Ref.	Part Number	Description
1.	983-05077	Shaft Assembly, Lift
2.	711-06143A	Ferrule, .510 x .496
3.	711-06346	Spring Insert
4.	912-3048	Nut, Jam, 1/2-13
5.	714-05005	Bow-Tie Cotter Pin
6.	731-09629A	Spacer, .76 ID x .93 LG
7.	732-05086A	Torsion Spring
8.	747-06186A	Deck Lift Handle
9.	747-06247A	Deck Lift Rod
10.	747-06392	Lift Adjustment Link
11.	748-04069	Pivot Cup
12.	783-08280	Rear Lift Arm
13.	720-05087	Grip
14.	712-05046	Hex Lock Nut, 1/2-13
15.	732-05242	Lift Assist Spring, (50"/54")

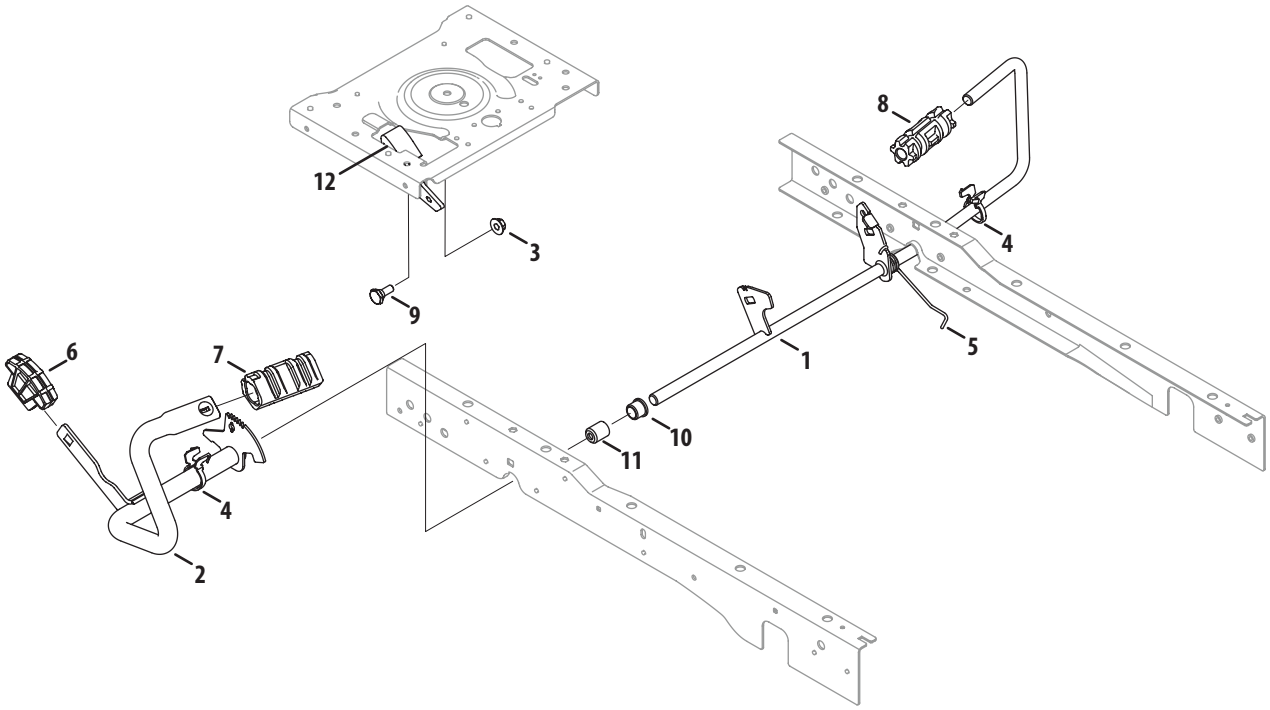

Ref.	Part Number	Description
1.	947-05033	Brake Pedal Assembly
2.	949-05026	FWD/REV Pedal Assembly
3.	712-04217	Flange Lock Nut, 3/8-16
4.	731-09957A	Clip
5.	732-05155	Torsion Spring, .725 ID
6.	735-05028	Reverse Pedal Pad
7.	735-05030	Forward Pedal Pad
8.	735-05051	Brake Pedal Pad
9.	938-0380	Shoulder Screw, .50 x .27, 3/8-16
10.	741-05074A	Flange Bearing, .63 x .84 x .71
11.	741-05085A	Plastic Sleeve Bearing
12.	748-04203	Cruise Latch

Fender

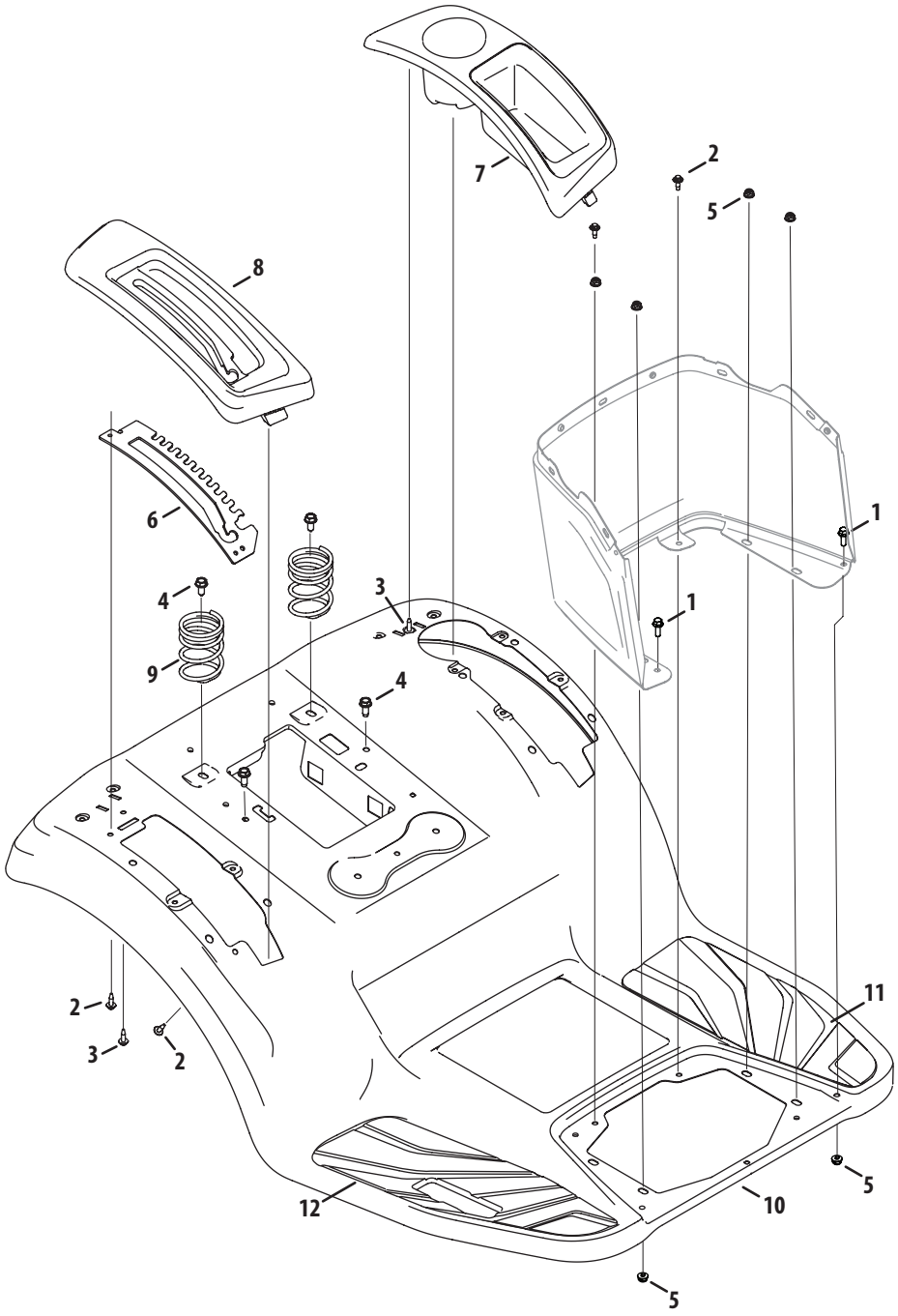

Ref.	Part Number	Description
1.	710-04666	Hex flange Screw, 1/4-20 x .75
2.	710-06133	Screw, M6-1 x .625
3.	710-06147	Screw, 1/4-10 x .75
4.	710-1260A	Screw, Self-tapping, 5/16-18, 0.750,
5.	712-04064	Nut, Flange Lock, 1/4-20, Nylon
6.	783-08559	Lift Index Bracket
7.	731-10172	Cover, LH
8.	631-05259	Cover, RH, Electric PTO
9.	732-05182	Compression Spring, 2.50 x 3.951 x .207
10.	783-08279	Fender
11.	731-09731	Pad, Foot, LH
12.	731-09812	Pad, Foot, RH

Hood

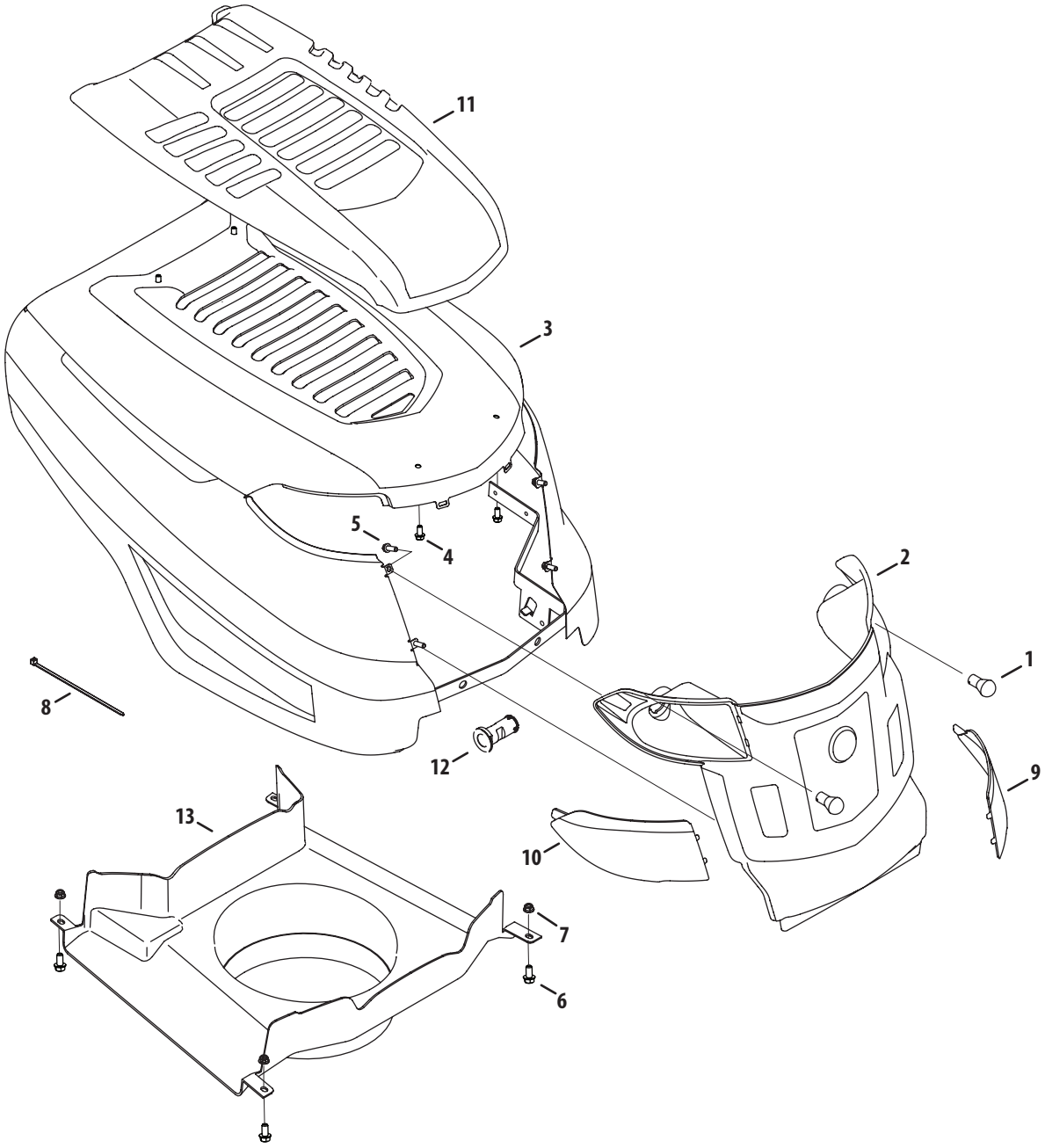

Ref.	Part Number	Description
1.	925-0963	Miniature lamp 12V socket
2.	631-04272	Grill
3.	683-05172	Hood Assembly
4.	710-04187	Screw, 1/4-15 x 0.50
5.	710-05108	Screw, 1/4 x .750
6.	710-0751	Hex Cap Screw, 1/4-20 x .62
7.	712-04064	Nut, Flange Lock, 1/4-20, Nylon
8.	725-0157	Cable Tie
9.	731-06095	Grill Lens - LH
10.	731-06096	Grill Lens - RH
11.	731-06194B	Hood Scoop
12.	731-10070A	Hood Pin
13.	931-10635	Plenum

Fuel Tank and Dash

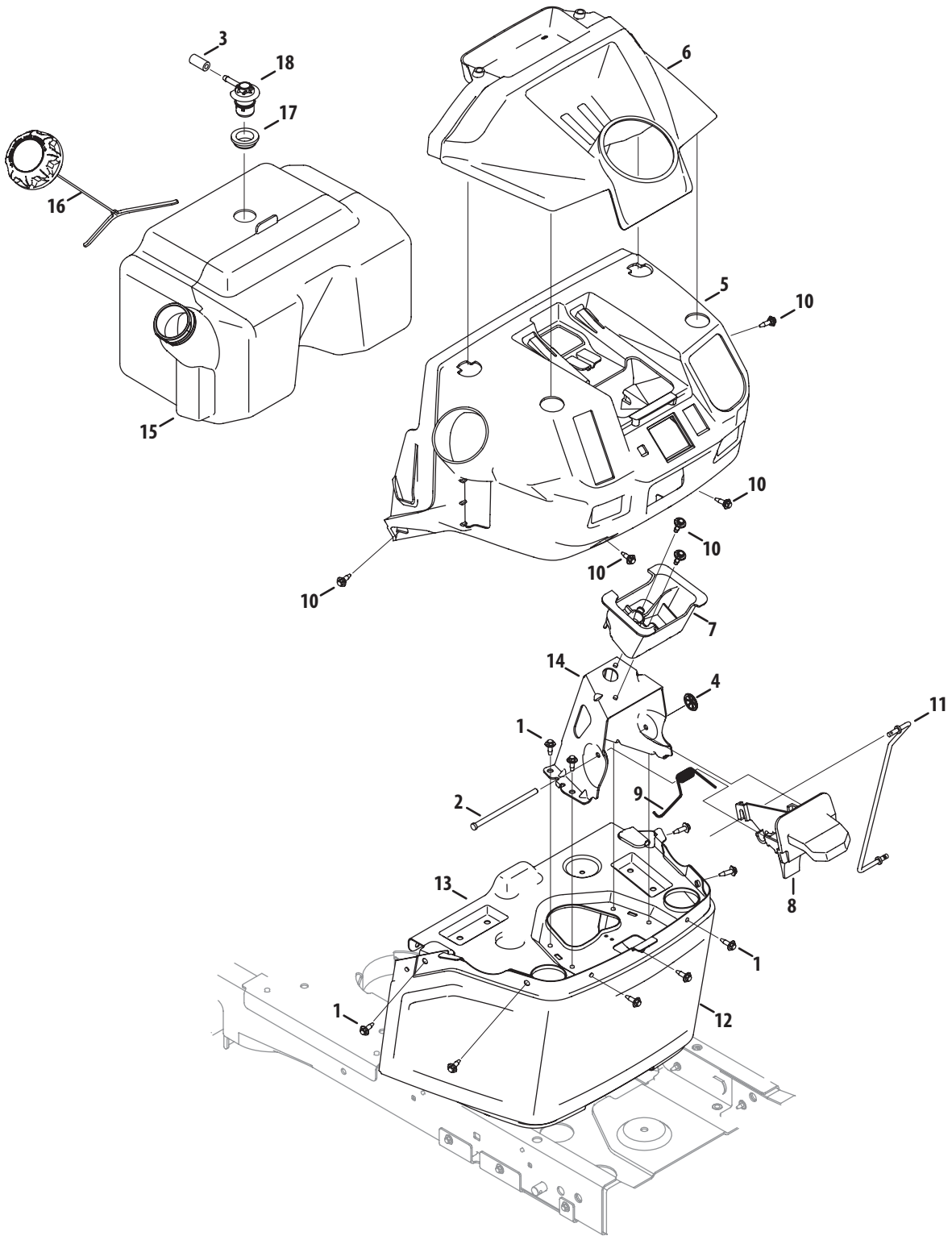

Ref.	Part Number	Description
1.	710-06133	Screw, M6-1 x .625
2.	711-06378	Hinge Pin, .25 Dia x 4.50 LG
3.	751-12089-45	Hose, Vent
4.	926-04012	Push Nut, .25 Dia.
5.	931-09815	Upper Dash
6.	731-10613	Dash Cap
7.	731-10618	Steering Shaft Bearing
8.	731-10636	Dash Lever
9.	732-05199	Torsion Spring, .330 ID
10.	738-05090	Shoulder Screw, .368 x .115, M6-1
11.	747-06192	Control Rod
12.	783-08391	Lower Dash
13.	783-08453	Dash Plate
14.	783-08538	Steering Bearing Mounting Bracket
15.	951-05101	Tank, Fuel, 3 Gal.
16.	951-14767	Fuel Cap
17.	735-04081	Grommet, Rubber, 23.0 ID
18.	751-12118	Valve, Rollover Grommet

Electrical

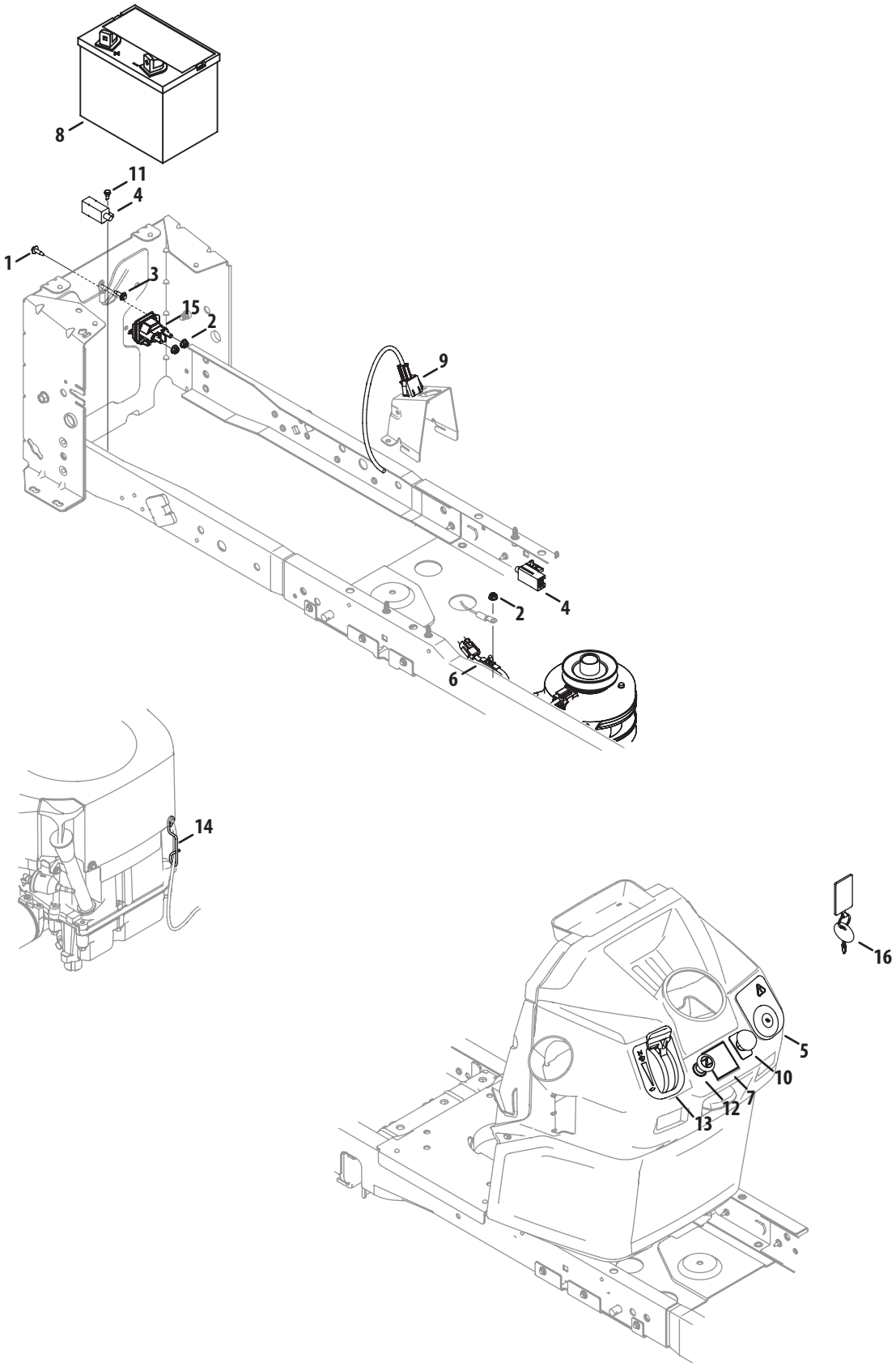

Ref.	Part Number	Description
1.	710-06133	Screw, M6-1 x .625
2.	712-05106	Nut, Jam Lock, 1/4-20, Nylon
3.	710-1652	Self-tapping Screw, 1/4-20 x .625
4.	725-04363	Switch, Interlock
5.	725-06102A	Key Switch
6.	725-06173	Jumper Harness
7.	925-06170	Hour Meter
8.	925-1707D	Battery
9.	925-06129	Dash Harness
10.	925-3233	PTO Switch
11.	738-04237A	Shoulder Screw, #10-32 x .500
12.	731-09956	Choke Plug
13.	946-05098	Throt/Choke Cable, 43.5"
14.	747-06308	Cable Guide Rod
15.	725-06153	Solenoid
16.	625-05002	Key, Assembly
—	925-06127††	Harness Assembly, Main
—	925-06167††	Reverse Harness
—	925-06132††	Headlight Harness

†† Not Shown

Drive System

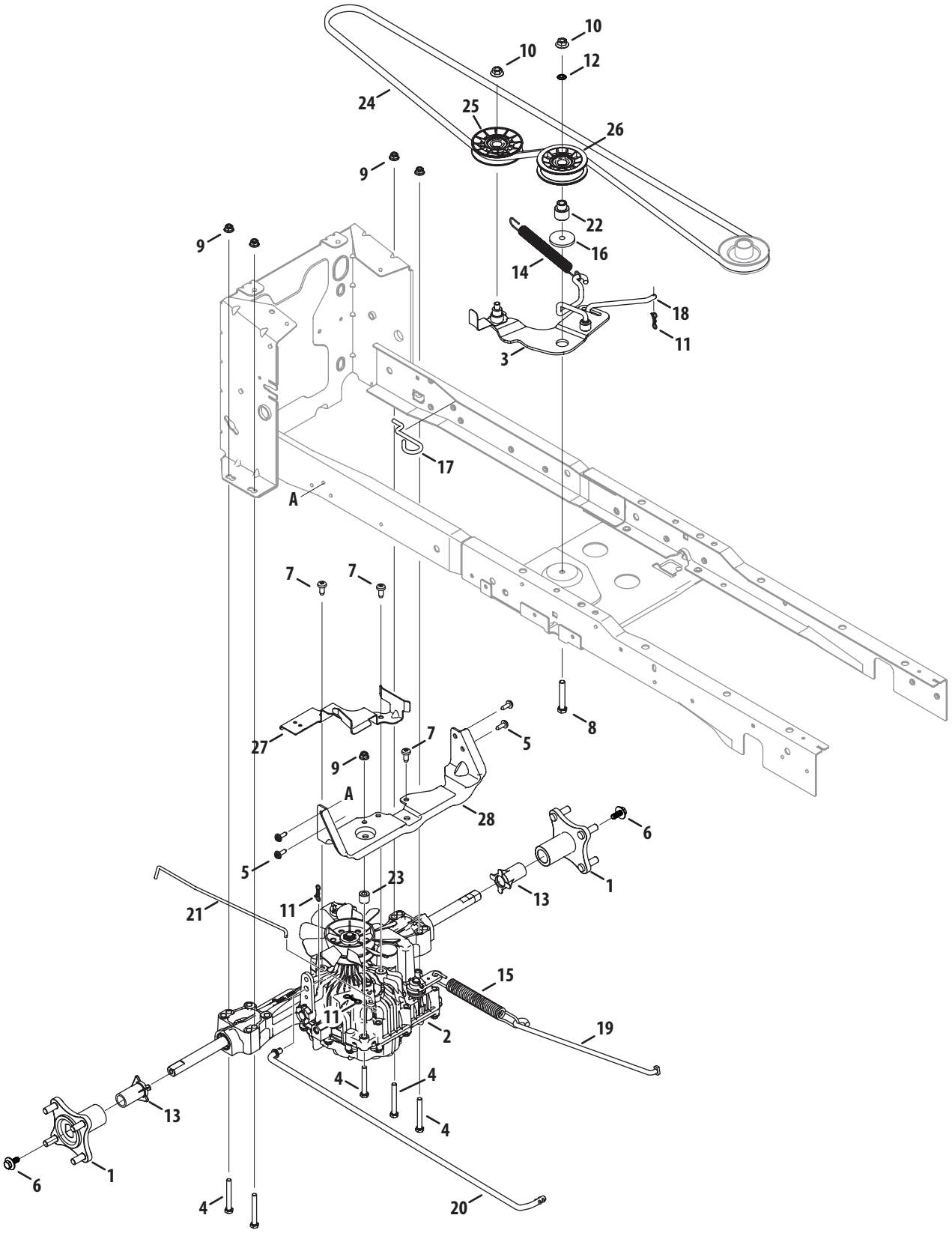

Ref.	Part Number	Description
1.	918-04228A	Hub Assembly, Wheel
2.	918-07009	Transmission, Tuff Torq K46
3.	983-05090	Idler bracket Assembly
4.	710-0378	Hex Screw, 5/16-18, 2.50, Gr5, Std
5.	710-06133	Screw, M6-1 x .625
6.	710-06154B	Screw, 5/16-24 x .850
7.	710-1611B	Screw, Self-tapping, 5/16-18, 0.750
8.	710-3011	Hex Screw, 3/8-16, 2.25, Gr5
9.	712-04063	Nut, Flange Lock, 5/16-18, Nylon
10.	712-04217	Flange Lock Nut, 3/8-16
11.	714-04040	Pin, Cotter, Bow-Tie 72
12.	726-0201	Speed Nut
13.	731-09827A	Sleeve, .765 ID x 1.575
14.	732-05108A	Spring, Extension, .700 Dia x 8.41
15.	732-05146	Spring, Extension, .90 Dia x 8.14
16.	738-04162C	Shoulder Spacer, .884 x .190
17.	747-05608	Deck Spring Rod
18.	747-06193	Idler Link
19.	747-06251A	Rod, Brake, Tuff Torq
20.	747-06281A	Rod, Control, Tuff Torq
21.	747-06447	Rod, Transmission, Bypass
22.	748-05037A	Shoulder Spacer
23.	750-06201	Spacer, .34 x .75 x .63
24.	954-05027	Belt, V-Type
25.	756-05024	Idler Pulley, 3.56 OD
26.	756-05032	Idler Pulley, 3.00 OD
27.	783-08342	Belt Keeper Bracket
28.	783-08463	Transmission Bracket

50-inch Deck

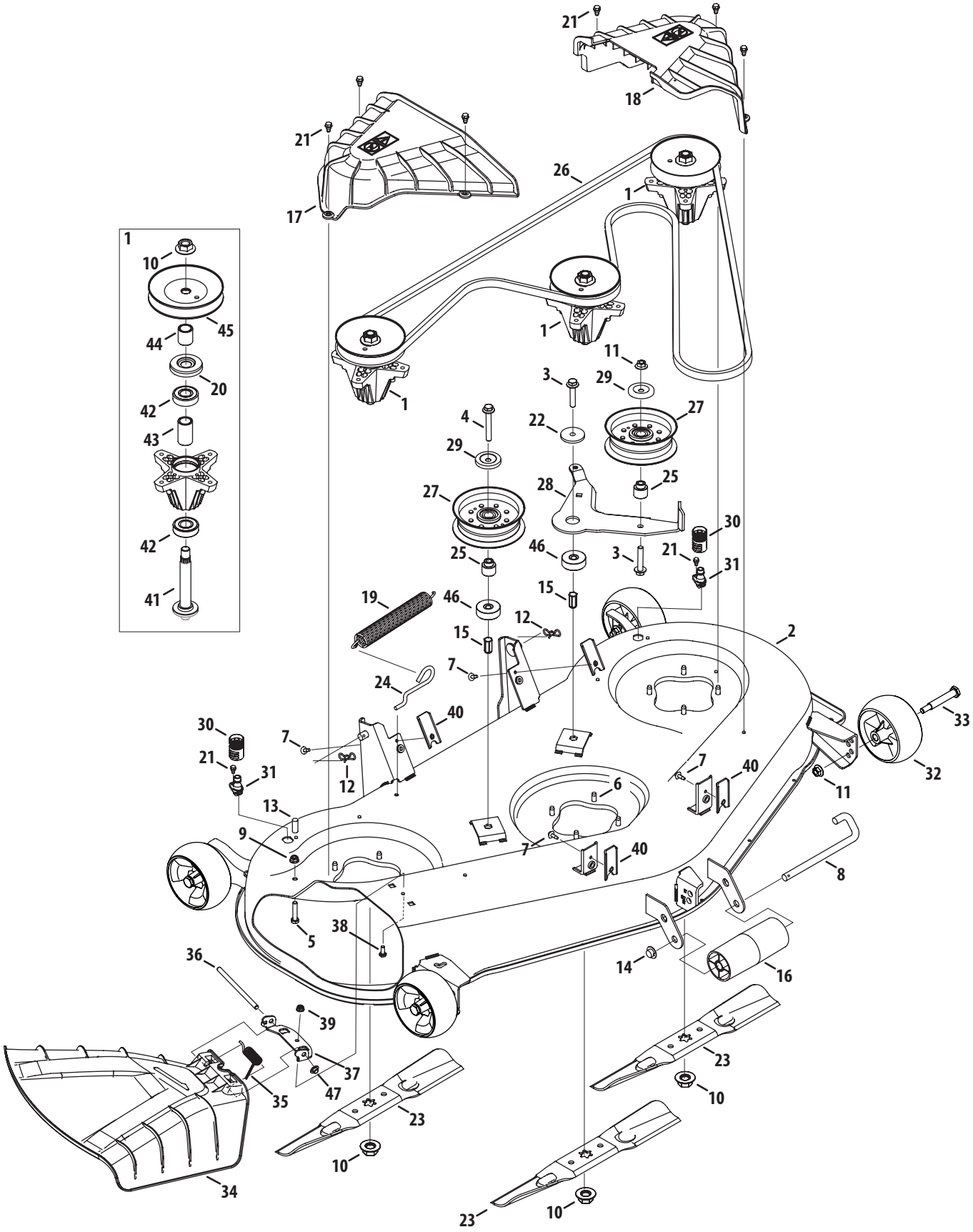

21
18
21
17
26
1
1
10
45
44
20
42
43
42
41
1
11
3
29
27
4
22
29
28
25
27
30
46
3
21
31
25
15
19
46
12
15
2
7
24
40
33
30
7
21
31
12
7
40
32
11
6
13
9
7
40
8
5
38
36
14
16
39
37
47
35
23
10
23
10
34
23
10

50-inch Deck

Ref.	Part Number	Description
1.	918-06980	Spindle Ass'y, Pulley, 5.37 Dia
2.	983-05103	Deck Assembly, 50"
3.	710-06178	Hex Cap Screw, 3/8-16 x 2.00
4.	710-06214	Hex Cap Screw, 3/8-16 x 2.75
5.	710-0805A	Hex Cap Screw, 5/16-18 x 1.50
6.	710-1260A	Screw, Self-tapping, 5/16-18, 0.750,
7.	710-06133	Screw, M6-1 x .625
8.	711-06377	Roller Pin, 1/2 x 7.31 Lg
9.	712-04063	Nut, Flange Lock, 5/16-18, Nylon
10.	712-0417A	Nut, Flange, 5/8-18
11.	712-04217	Flange Lock Nut, 3/8-16
12.	714-05005	Bow-Tie Cotter Pin
13.	720-05075	Vinyl Cap, .29 x 1.00
14.	726-0299	Push Cap, 1/2"
15.	728-05016	Rivet Nut, 3/8-16
16.	731-05679B	Front Roller
17.	731-09968	Belt Cover, RH
18.	731-09969A	Belt Cover, LH
19.	732-04927	Spring, Extension, 1.25 OD x 8.5
20.	783-08435	Bearing Shield
21.	738-04502	Shoulder Screw, 1/4-20 x 0.50
22.	738-05082	Shoulder Spacer, .970 x .190
23.	942-05052A	Blade, Cut, 17.27" 2-In-1, Cub
24.	747-05608	Deck Spring Rod

Ref.	Part Number	Description
25.	748-05037A	Shoulder Spacer
26.	954-04077A	Belt, V-Type, B Sec x 134
27.	756-05034	Pulley, Idler, 4.50" Dia.
28.	783-08309A	Pivot Idler bracket
29.	783-08389	Pulley Cap
30.	921-04041	Coupler, Water
31.	731-07487	Deck Wash Nozzle
32.	734-04155	Wheel, Deck, 5.0 Dia. Ball
33.	938-3056	Bolt, Shoulder, .496 x 2.50, 3/8-16
34.	631-05116	Chute Deflector Assembly
35.	732-05261	Spring, Torsion, .440 ID x 1.75
36.	747-06290A	Hinge Pin
37.	783-08504A	Bracket, Chute, 42"
38.	710-0751	Hex Cap Screw, 1/4-20 x .62
39.	712-04064	Nut, Flange Lock, 1/4-20, Nylon
40.	783-08404A	Bracket, Lift, Stop
41.	738-1186A	Shaft, Spindle, 6.11
42.	941-0919B	Bearing, Ball, .787id x 1.85 Od x .551
43.	750-04936	Spacer, .792 x 1.060 x 1.860
44.	750-06152	Spacer, .792 x 1.060 x 1.782
45.	756-05036	Pulley, Deck, 5.00 Dia.
46.	750-06184	Spacer, .385 ID x 1.75 OD x .585
47.	726-04009	Push Cap

54-inch Deck

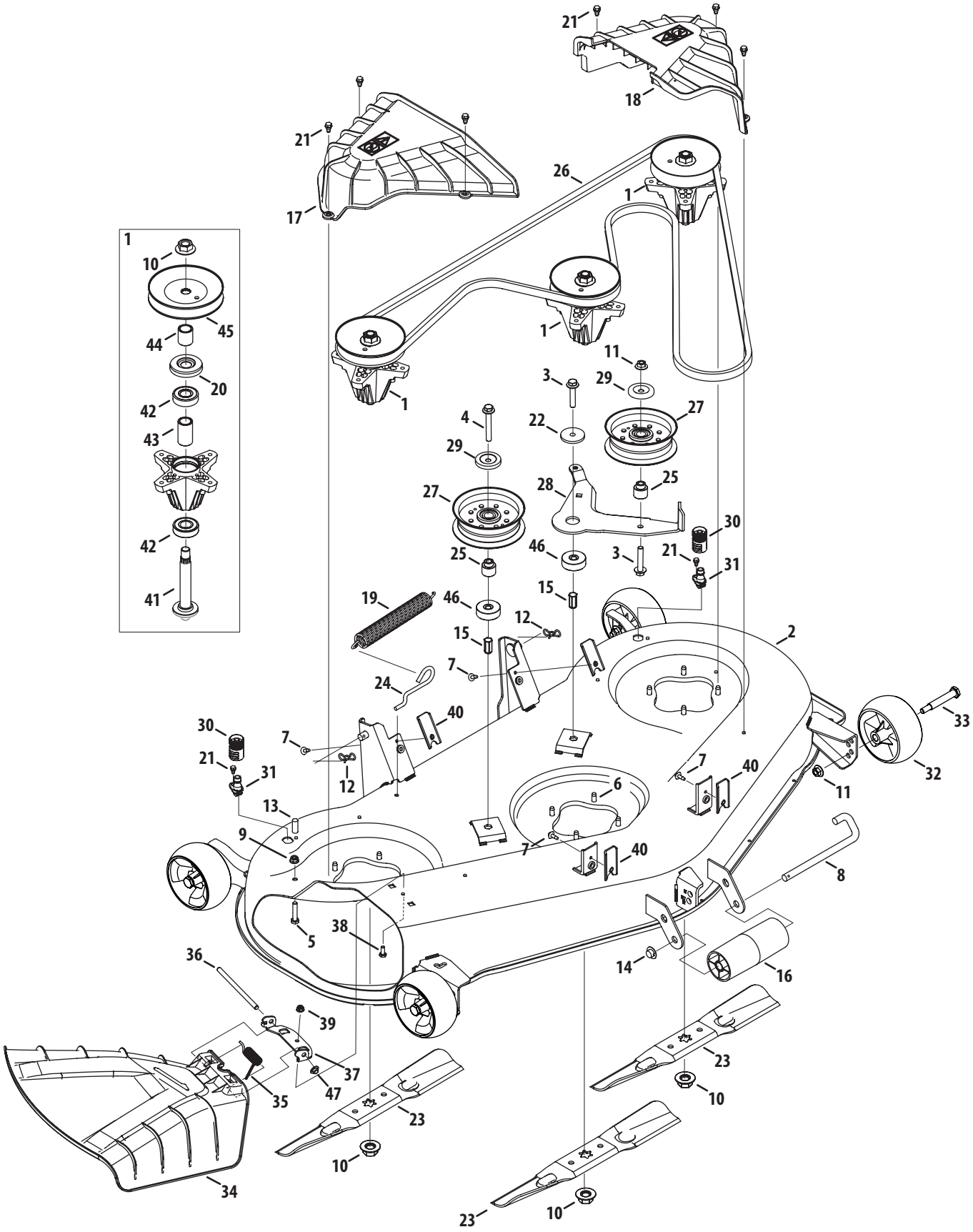

21
18
21
17
26
1
1
1
1
10
45
44
20
42
43
42
41
11
3
29
27
4
22
29
28
25
27
30
46
3
21
31
25
15
19
46
12
15
2
7
24
40
30
7
21
31
12
33
32
7
40
11
6
13
9
7
40
8
5
38
36
14
16
39
37
47
35
23
10
23
10
34
23
10

Ref.	Part Number	Description
1.	918-06978	Spindle Ass'y, Pulley, 5.37 Dia
2.	983-05104	Deck Assembly, 54"
3.	710-06178	Hex Cap Screw, 3/8-16 x 2.00
4.	710-06214	Hex Cap Screw, 3/8-16 x 2.75
5.	710-0805A	Hex Cap Screw, 5/16-18 x 1.50
6.	710-1260A	Screw, Self-tapping, 5/16-18, 0.750,
7.	710-06133	Screw, M6-1 x .625
8.	711-06377	Roller Pin, 1/2 x 7.31 Lg
9.	712-04063	Nut, Flange Lock, 5/16-18, Nylon
10.	712-0417A	Nut, Flange, 5/8-18
11.	712-04217	Flange Lock Nut, 3/8-16
12.	714-05005	Bow-Tie Cotter Pin
13.	720-05075	Vinyl Cap, .29 x 1.00
14.	726-0299	Push Cap, 1/2"
15.	728-05016	Rivet Nut, 3/8-16
16.	731-05679B	Front Roller
17.	731-09968	Belt Cover, RH
18.	731-09969A	Belt Cover, LH
19.	732-04927	Spring, Extension, 1.25 OD x 8.5
20.	783-08435	Bearing Shield
21.	738-04502	Shoulder Screw, 1/4-20 x 0.50
22.	738-05082	Shoulder Spacer, .970 x .190
23.	942-05056A	Blade, Cut, 18.67" 2-In-1, Cub
24.	747-05608	Deck Spring Rod

Ref.	Part Number	Description
25.	748-05037A	Shoulder Spacer
26.	954-05025	Belt, V-Type, B Sec x 139
27.	756-05034	Pulley, Idler, 4.50" Dia.
28.	783-08309A	Pivot Idler bracket
29.	783-08389	Pulley Cap
30.	921-04041	Coupler, Water
31.	731-07487	Deck Wash Nozzle
32.	734-04155	Wheel, Deck, 5.0 Dia. Ball
33.	938-3056	Bolt, Shoulder, .496 x 2.50, 3/8-16
34.	631-05116	Chute Deflector Assembly
35.	732-05261	Spring, Torsion, .440 ID x 1.75
36.	747-06290A	Hinge Pin
37.	783-08504A	Bracket, Chute, 42"
38.	710-0751	Hex Cap Screw, 1/4-20 x .62
39.	712-04064	Nut, Flange Lock, 1/4-20, Nylon
40.	783-08404A	Bracket, Lift, Stop
41.	738-1186A	Shaft, Spindle, 6.11
42.	941-0919B	Bearing, Ball, .787id x 1.85 Od x .551
43.	750-04936	Spacer, .792 x 1.060 x 1.860
44.	750-06152	Spacer, .792 x 1.060 x 1.782
45.	756-05038	Pulley, Deck, 4.50 Dia.
46.	750-06184	Spacer, .385 ID x 1.75 OD x .585
47.	726-04009	Push Cap

Engine Accessories

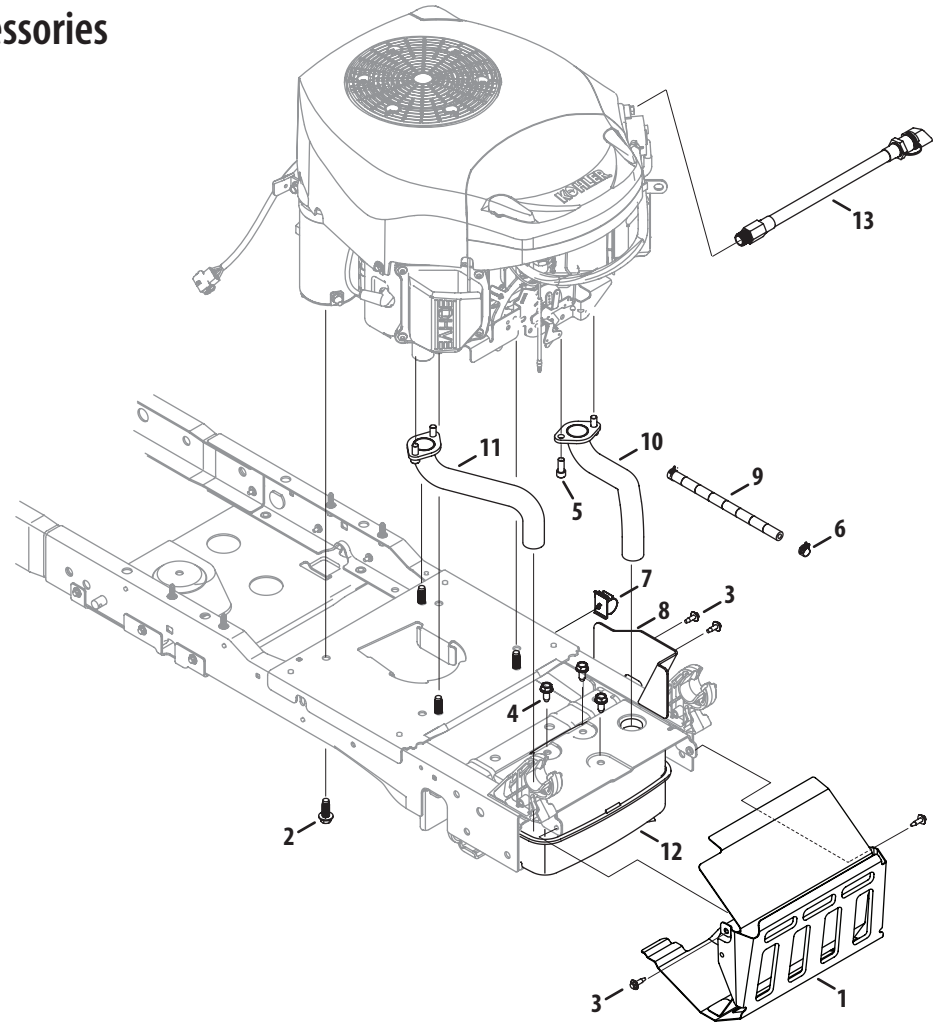

Ref.	Part Number	Description
1.	983-05142	Shield Ass'y, Muffler
2.	710-04683B	Screw, Self-tapping, 3/8-16, 1.0
3.	710-06133	Screw, M6-1 x .625
4.	710-06256	Screw, Self-tapping, M8-1.25, .750
5.	710-1314A	Screw, Sokt Head, 5/16-18, .750
6.	726-0205	Clamp, Hose, .490 Dia.
7.	731-10746	Push Mount Wire Clip, .750
8.	783-08814	Muffler Shield
9.	751-10349-16	Hose, Fuel, Low Permeation, 1/4
10.	751-14478	Exhaust Pipe, LH
11.	751-14479	Exhaust Pipe, RH
12.	751-14503A	Muffler, Kohler
13.	751-14836	Drain, Oil

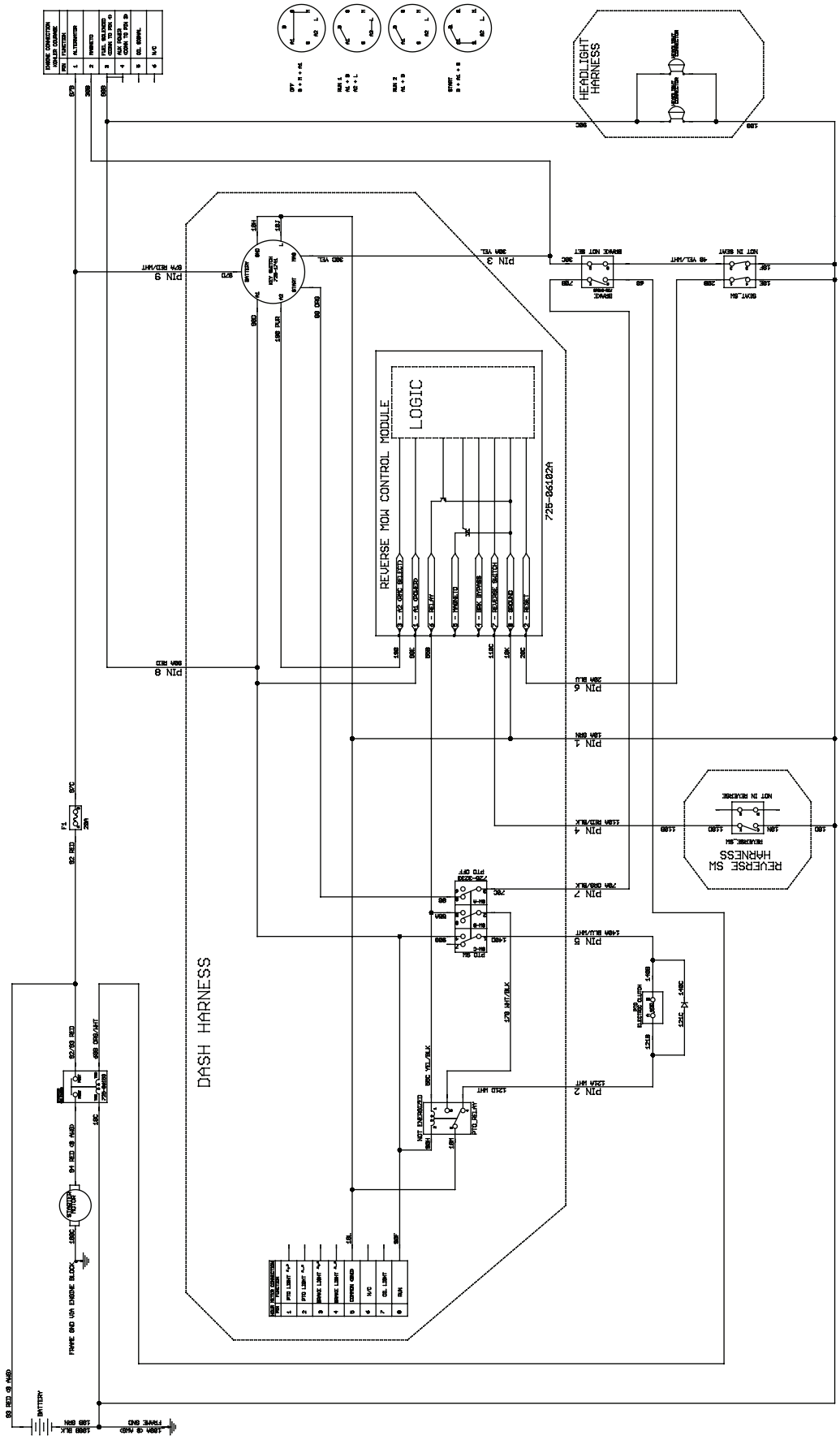
HEADLIGHT HARNESS
REVERSE MOW CONTROL MODULE
LOGIC
725-06102A
DASH HARNESS
REVERSE SW HARNESS
BATTERY
FRAME GND
PIN 1
PIN 2
PIN 3
PIN 4
PIN 5
PIN 6
PIN 7
PIN 8
PIN 9
PIN 10
PIN 11
PIN 12

Notes

To order replacement parts or locate your nearest service dealer call Customer Support at (800) 828-5500.
or visit www.troybilt.com to find the nearest authorized dealer in your area.

TROY-BILT LLC, P.O. BOX 361131 CLEVELAND, OHIO 44136-0019