Operator's Manual

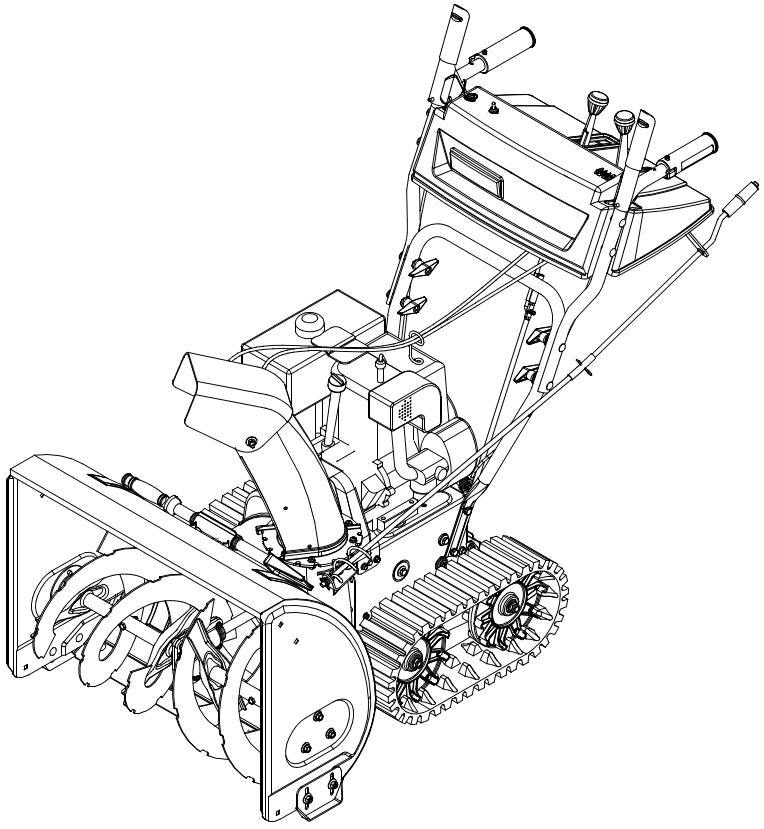

SNOW THROWER

MODEL 7L3

IMPORTANT: READ SAFETY RULES AND INSTRUCTIONS CAREFULLY

Warning: This unit is equipped with an internal combustion engine and should not be used on or near any unimproved forest-covered, brush-covered or grass-covered land unless the engine's exhaust system is equipped with a spark arrester meeting applicable local or state laws (if any). If a spark arrester is used, it should be maintained in effective working order by the operator. In the State of California the above is required by law (Section 4442 of the California Public Resources Code). Other states may have similar laws. Federal laws apply on federal lands. A spark arrester for the muffler is available through your nearest engine authorized service dealer or contact the service department, P.O. Box 361131 Cleveland, Ohio 44136-0019.

MTD LLC P.O. BOX 361131 CLEVELAND, OHIO 44136-0019

PRINTED IN U.S.A.

FORM NO. 770-10021F
(6/04)

TABLE OF CONTENTS

Content	Page	Content	Page
Important Safe Operation Practices	3	Maintaining Your Snow Thrower	12
Assembling Your Snow Thrower	5	Servicing Your Snow Thrower	12
Know Your Snow Thrower	6	Trouble Shooting	16
Operating Your Snow Thrower	7	Illustrated Parts List	18
Adjusting Your Snow Thrower	10	Warranty	28

FINDING MODEL NUMBER

This Operator's Manual is an important part of your new snow thrower. It will help you assemble, prepare and maintain the unit for best performance. Please read and understand what it says.



Before you start assembling your new equipment, please locate the model plate on the equipment and copy the information from it in the space provided below. A sample model plate is also given below. You can locate the model plate by looking at the lower frame cover on the rear of your snow thrower. This information will be necessary to use the manufacturer's web site and/or help from the Customer Support Department or an authorized service dealer.



Copy the model number here: _____

Copy the serial number here: _____

CUSTOMER SUPPORT

Please do NOT return the unit to the retailer from where it was purchased, without first contacting Customer Support.

If you have difficulty assembling this product or have any questions regarding the controls, operation or maintenance of this unit, you can seek help from the experts. Choose from the options below:



Visit **yardman.com** for many useful suggestions. Click on Customer Support button and you will get the four options reproduced here. Click on the appropriate button and help is immediately available.

The answer you are looking for could be just a mouse click away!

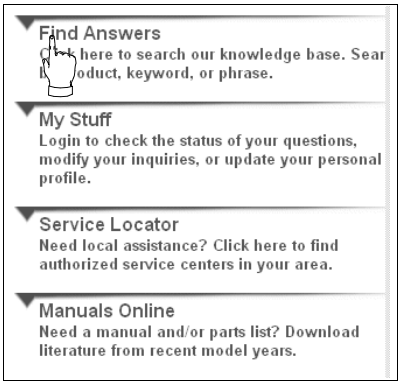

The answer you are looking for could be just a mouse click away!

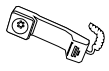

If you prefer to reach a Customer Support Representative, please call **1-800-800-7310**.



The **engine** manufacturer is responsible for all engine-related issues with regards to performance, power-rating, specifications, warranty and service. Please refer to the engine manufacturer's Owner's/Operator's Manual, packed separately with your unit, for more information.

SECTION 1: IMPORTANT SAFE OPERATION PRACTICES



Wklv#v|p ero#srlqw#rxw#lp sruwdqw#vdihw|#lqvwuxfwlrqv/#z klfk#li#qrw#iroorz hg/#frxog#hqgdqjhu#wkh#shuvrqdo#vdihw|#dqg2ru#surshuw|#ri#|rxuvhoi#dqg#rwkhuv1#Uhdg#dqg#iroorz #doo#lqvwuxfwlrqv#lq#wklv#p dqxdo#ehiruh#dwwhp swlqj#wr#rshudwh#wklv#p dfklqh1#Idlxuh#wr#frp so|#z lwk#wkhvh#lqvwuxfwlrqv#p d|#uhvxow#lq#shuvrqdo#lqmxu|1#Z khq#|rx#vhh#wklv#v|p eroÙ khhg#lwv#z duqlqj.



WARNING: Hqjlqh#H{kdxvw/#vrp h#ri#lwv#frqvwlwxhqwv/#dqg#fhuwdlq#yhklfoh#frp srqhqwv#frqwdlq ru#hp lw#fkhp lfdov#nqrz q#wr#wkh#Vwdwh#ri#F ddiruqld#wr#fdxvh#fdqfhu/#eluk#ghihfwv#ru#rwkhu uhsurgxfwlyh#kdup .



DANGER: Wklv#p dfklqh#z dv#exlow#wr#eh#rshudwhg#dffruglqj#wr#wkh#xoh v#iru#vdih#rshudwlrq#lq#wklv#p dqxdo1#Dv#z lwk#dq|#w|sh#ri#srz hu#htxlsp hqw/#fduhohvvqhvv#ru#huuru#rq#wkh#sduw#ri#wkh#rshudwru#fdq#uhvxow#lq#vhulrxv#lqmxu|1#Wklv#p dfklqh#lv#fdsdeoh#ri#dp sxwdwlqj#kdqgv#dqg#ihhw#dqg#wkurz lqj#remlnfwv1#Idlxuh#wr#revhuyh#wkh#iroorz lqj#vdihw|#lqvwuxfwlrqv#frxog#uhvxow#lq#vhulrxv#lqmxu|#ru#ghdwk.

TRAINING

1. Read, understand, and follow all instructions on the machine and in the manual(s) before attempting to assemble and operate. Keep this manual in a safe place for future and regular reference and for ordering replacement parts.
2. Be familiar with all controls and their proper operation. Know how to stop the machine and disengage them quickly.
3. Never allow children under 14 years old to operate this machine. Children 14 years old and over should read and understand the operation instructions and safety rules in this manual and should be trained and supervised by a parent.
4. Never allow adults to operate this machine without proper instruction.
5. Thrown objects can cause serious personal injury. Plan your snow-throwing pattern to avoid discharge of material toward roads, bystanders and the like.
6. Keep bystanders, helpers, pets and children at least 75 feet from the machine while it is in operation. Stop machine if anyone enters the area.
7. Exercise caution to avoid slipping or falling, especially when operating in reverse.

PREPARATION

1. Thoroughly inspect the area where the equipment is to be used. Remove all doormats, newspapers, sleds, boards, wires and other foreign objects, which could be tripped over or thrown by the auger/impeller.
2. Always wear safety glasses or eye shields during operation and while performing an adjustment or repair to protect your eyes. Thrown objects which ricochet can cause serious injury to the eyes.
3. Do not operate without wearing adequate winter outer garments. Do not wear jewelry, long scarves or other loose clothing, which could become entangled in moving parts. Wear footwear which will improve footing on slippery surfaces.
4. Use a grounded three-wire extension cord and receptacle for all units with electric start engines.
5. Adjust collector housing height to clear gravel or crushed rock surfaces.
6. Disengage all clutch levers before starting the engine.
7. Never attempt to make any adjustments while engine is running, except where specifically recommended in the operator's manual.
8. Let engine and machine adjust to outdoor temperature before starting to clear snow.
9. To avoid personal injury or property damage use extreme care in handling gasoline. Gasoline is extremely flammable and the vapors are explosive. Serious personal injury can occur when gasoline is spilled on yourself or your clothes, which can ignite. Wash your skin and change clothes immediately.
   a. Use only an approved gasoline container.
   b. Extinguish all cigarettes, cigars, pipes and other sources of ignition.
   c. Never fuel machine indoors.
   d. Never remove gas cap or add fuel while the engine is hot or running.
   e. Allow engine to cool at least two minutes before refueling.
   f. Never over fill fuel tank. Fill tank to no more than ½ inch below bottom of filler neck to provide space for fuel expansion.
   g. Replace gasoline cap and tighten securely.
   h. If gasoline is spilled, wipe it off the engine and equipment. Move machine to another area. Wait 5 minutes before starting the engine.
   i. Never store the machine or fuel container inside where there is an open flame, spark or pilot light (e.g. furnace, water heater, space heater, clothes dryer etc.).
   j. Allow machine to cool at least 5 minutes before storing.

OPERATION

1. Do not put hands or feet near rotating parts, in the auger/impeller housing or chute assembly. Contact with the rotating parts can amputate hands and feet.
2. The auger/impeller control is a safety device. Never bypass its operation. Doing so makes the machine unsafe and may cause personal injury.
3. The controls must operate easily in both directions and automatically return to the disengaged position when released.
4. Never operate with a missing or damaged chute assembly. Keep all safety devices in place and working.

5. Never run an engine indoors or in a poorly ventilated area. Engine exhaust contains carbon monoxide, an odorless and deadly gas.
6. Do not operate machine while under the influence of alcohol or drugs.
7. Muffler and engine become hot and can cause a burn. Do not touch.
8. Exercise extreme caution when operating on or crossing gravel surfaces. Stay alert for hidden hazards or traffic.
9. Exercise caution when changing direction and while operating on slopes.
10. Plan your snow-throwing pattern to avoid discharge towards windows, walls, cars etc. Thus, avoiding possible property damage or personal injury caused by a ricochet.
11. Never direct discharge at children, bystanders and pets or allow anyone in front of the machine.
12. Do not overload machine capacity by attempting to clear snow at too fast of a rate.
13. Never operate this machine without good visibility or light. Always be sure of your footing and keep a firm hold on the handles. Walk, never run.
14. Disengage power to the auger/impeller when transporting or not in use.
15. Never operate machine at high transport speeds on slippery surfaces. Look down and behind and use care when in reverse.
16. If the machine should start to vibrate abnormally, stop the engine, disconnect the spark plug wire and ground it against the engine. Inspect thoroughly for damage. Repair any damage before starting and operating.
17. Disengage all controls and stop engine before you leave the operating position (behind the handles). Wait until the auger/impeller comes to a complete stop before unclogging the chute assembly, making any adjustments, or inspections.
18. Never put your hand in the discharge or collector openings. Always use the clean-out tool provided to unclog the discharge opening. Do not unclog chute assembly while engine is running.Shut off engine and remain behind handles until all moving parts have stopped before unclogging.
19. Use only attachments and accessories approved by the manufacturer (e.g. wheel weights, tire chains, cabs etc.).
20. If situations occur which are not covered in this manual, use care and good judgment. Contact your dealer or telephone 1-800-800-7310 for assistance and the name of your nearest servicing dealer.

MAINTENANCE AND STORAGE

1. Never tamper with safety devices. Check their proper operation regularly. Refer to the maintenance and adjustment sections of this manual.
2. Before cleaning, repairing, or inspecting machine disengage all controls and stop engine. Wait until the auger/impeller come to a complete stop. Disconnect the spark plug wire and ground against the engine to prevent unintended starting.
3. Check bolts and screws for proper tightness at frequent intervals to keep the machine in safe working condition. Also, visually inspect machine for any damage.
4. Do not change the engine governor setting or over-speed the engine. The governor controls the maximum safe operating speed of the engine.
5. Snow thrower shave plates and skid shoes are subject to wear and damage. For your safety protection, frequently check all components and replace with original equipment manufacturer's (OEM) parts only. "Use of parts which do not meet the original equipment specifications may lead to improper performance and compromise safety!"
6. Check clutch controls periodically to verify they engage and disengage properly and adjust, if necessary. Refer to the adjustment section in this operator's manual for instructions.
7. Maintain or replace safety and instruction labels, as necessary.
8. Observe proper disposal laws and regulations for gas, oil, etc. to protect the environment.
9. Prior to storing, run machine a few minutes to clear snow from machine and prevent freeze up of auger/impeller.
10. Never store the machine or fuel container inside where there is an open flame, spark or pilot light such as a water heater, furnace, clothes dryer etc.
11. Always refer to the operator's manual for proper instructions on off-season storage.

WARNING: Restrict the use of this power machine to persons who read, understand and follow the warnings and instructions in this manual and on the machine.





SECTION 2: ASSEMBLING YOUR SNOW THROWER

NOTE: *References to right or left side of the snow thrower are determined from behind the unit in the operating position. The "operator's position" is defined as standing directly behind the snow thrower, facing the handle panel.*

Unpacking

- Remove screws from the top sides and ends of the shipping crate.
- Set panel aside to avoid tire punctures or personal injury.
- Remove and discard plastic bag that covers unit.
- Remove any loose parts included with unit (i.e., Operator's Manual, etc.).
- Roll unit out of crate.

Loose Parts

The augers are secured to the auger shaft with two shear bolts and flange lock nuts. If you hit a foreign object or ice jam, the snow thrower is designed so that the bolts may shear. Two replacement shear bolts and nuts are provided for your convenience. Store in a safe place until needed. See Figure 1.

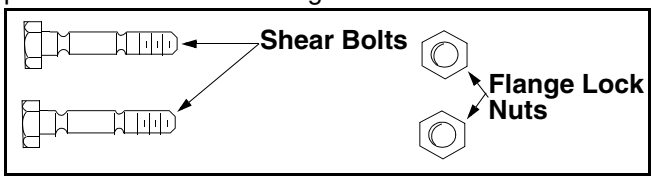

Figure 1

Assembly

WARNING: Disconnect the spark plug wire and ground it against the engine to prevent unintended starting.

- Remove the **lower** two plastic wing knobs, cupped washers and carriage bolts from each side of the lower handle. See Figure 2.

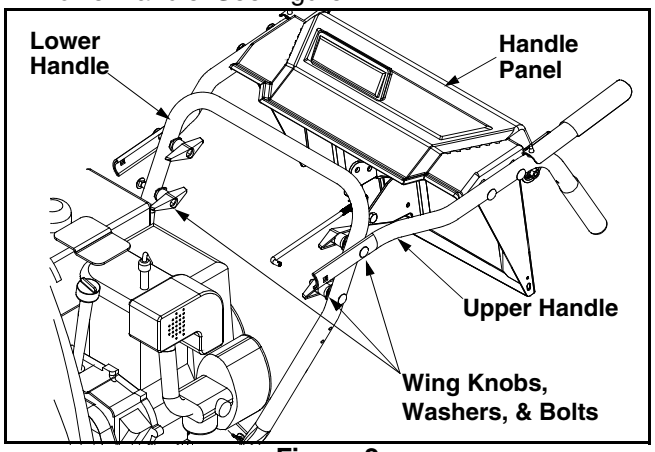

Figure 2

- Raise the upper handle assembly until it locks over the lower handle.
- Look at the lower rear of snow thrower frame to be sure both cables are aligned with cable roller guides.
- Secure the upper handle and lower handle with the two plastic wing knobs, cupped washers and carriage bolts previously removed and tighten the upper two plastic wing knobs. See Figure 3.

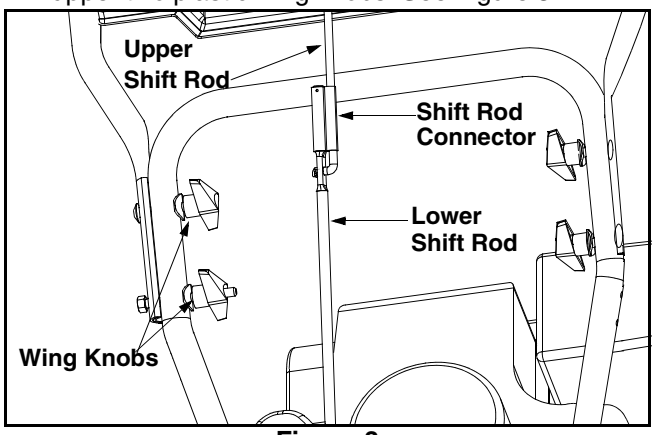

Figure 3

- Slide the shift rod connector down over the end of the lower shift rod. Tap the connector until it **locks** on the lower shift rod. See Figure 3.

NOTE: *If the connector is not properly assembled, the shift rod will pivot and you will not be able to change speeds or change directions.*

- If not already attached, slip the cables that run from the handle panel to the chute into the cable guide located on top of the engine. See Figure 4.

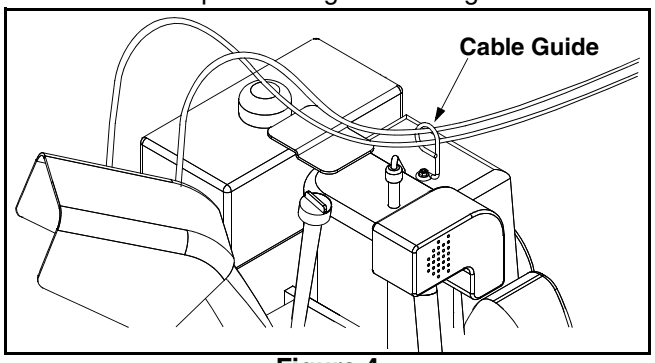

Figure 4

- Unwrap the headlight wire, which is attached to the headlight beneath the handle panel.
- Wind the headlight wire around the right handle until excess slack is removed.
- Plug the wire from the headlight into the wire lead coming from the right side of the engine, beneath the fuel tank.

SECTION 3: KNOW YOUR SNOW THROWER

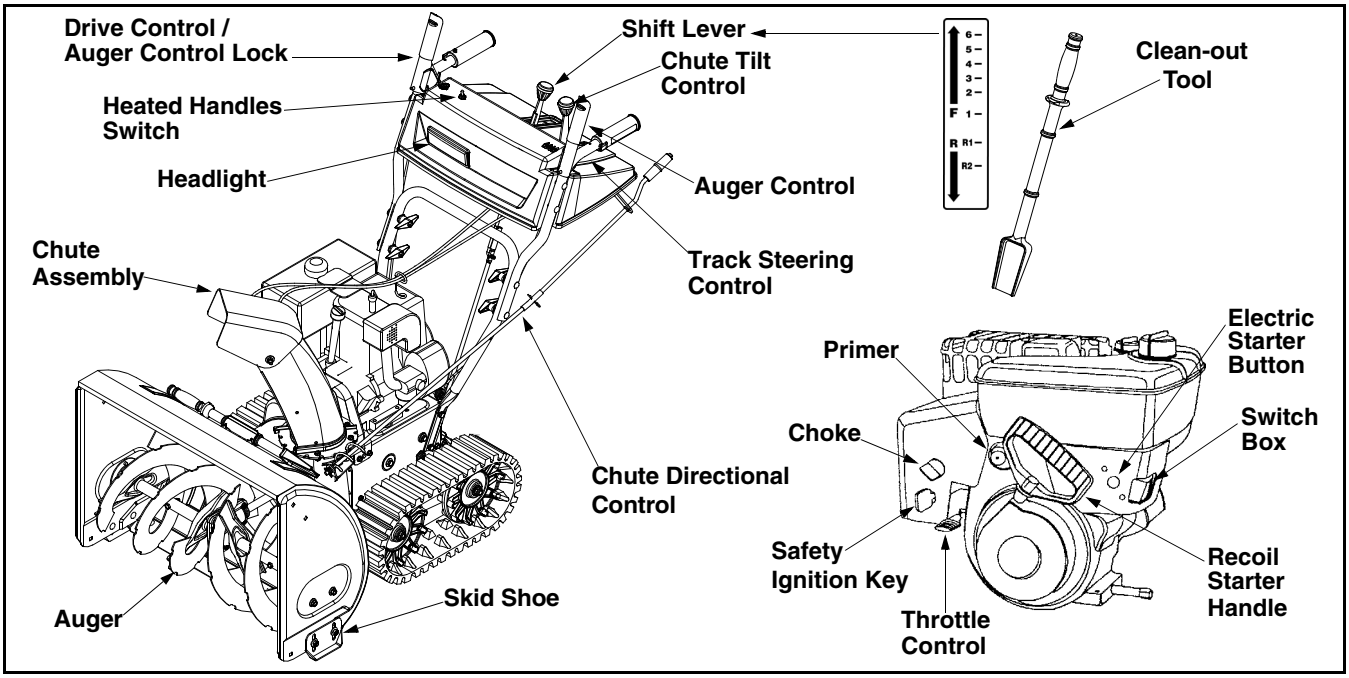

Figure 5

WARNING: Read, understand, and follow all instructions and warnings on the machine and in this manual before operating.

Drive Control / Auger Control Lock

The drive control is located on the right handle. Squeeze the drive control to engage the wheel drive. Release to stop. See Figure 5.

The drive control also locks the auger control so you can turn the chute directional control without interrupting the snow throwing process. If the auger control is engaged along with the drive control, the operator can release the auger control (on the left handle) and the augers will remain engaged. Release both controls to stop the augers and track drive.

IMPORTANT: Always release drive control before changing speeds.

Auger Control

The auger control is located on the left handle. Squeeze the auger control to engage the augers. Release to stop the snow throwing action. (Drive control must also be released.) See Figure 5.

IMPORTANT: Refer to **Auger Control Test** on page 9 prior to operating your snow thrower. Read and follow all instructions carefully and perform all adjustments to verify your snow thrower is operating safely and properly.

Chute Tilt Control

The distance snow is thrown can be changed by adjusting the angle of the upper chute. Move the chute tilt control forward to decrease the distance, and backwards to increase distance. See Figure 5.

Skid Shoe

The space between the shave plate and the ground can be adjusted by positioning the skid shoes. Refer to **Skid Shoe Adjustment** on page 11.

Shift Lever

The shift lever is located in the center of the handle panel and is used to determine both ground speed and direction of travel. It can be moved into any of eight positions. See Figure 5.

Forward

Your snow thrower has six forward (F) speeds, with position number one (1) being the slowest speed.

Reverse

Your snow thrower has two reverse (R) speeds, with position number one (1) being the slowest speed.

IMPORTANT: Always release drive control before changing speeds.

Chute Directional Control

The chute directional control is located on left side of the snow thrower. See Figure 5.

To change the direction in which snow is thrown, turn chute directional control as follows:

- Crank clockwise to discharge to the left.
- Crank counterclockwise to discharge to the right.

Heated Handles Switch

This switch is located on the right side of the snow thrower dash panel. To activate the heated handles, toggle the switch to the right to generate heat within the handle grips. Toggle the switch to the left to the OFF position after using the snow thrower. See Figure 5.

NOTE: *The heated handles grips are a compliment to, not a substitute for, proper cold weather outerwear for the operator's hands. It is recommended that the snow thrower operator wear gloves/mittens to avoid extremities of winter while operating this equipment.*

Track Steering Controls

The left and right track steering controls are located on the underside of the handles and they are used to assist in steering the snow thrower. Squeeze the right track control when turning right, squeeze the left control when turning left. Operate your snow thrower in open areas until you become familiar with these controls. See Figure 5.

NOTE: *It is easier to maneuver a non-running snow thrower with both track steering controls held in simultaneously.*

Throttle Control

The throttle control is located on the engine. It regulates the speed of the engine and will shut off the engine when pushed down completely. See Figure 5.

Safety Ignition Key

The safety ignition key must be fully inserted and snapped in place before the unit will start. Remove the ignition key to prevent unauthorized use of equipment. See Figure 5.

IMPORTANT: Do NOT attempt to turn the key.

Headlight

The headlight is on whenever the engine is running.

Track Lock Lever

The track lock lever is located on the right side of the snow thrower and is used to select the position of the auger housing and the method of track operation. Move the lever to the right, then forward or backward to one of the three positions. See Figure 6.

Transport: Raises the front end of the snow thrower for easy transport. Using proper caution, this position may also be used on many gravel driveways to clear snow while leaving gravel undisturbed.

Normal Snow: Allows the tracks to be suspended independently for continuous ground contact.

Packed Snow: Locks the front end of the snow thrower down to the ground for hard-packed or icy snow conditions.

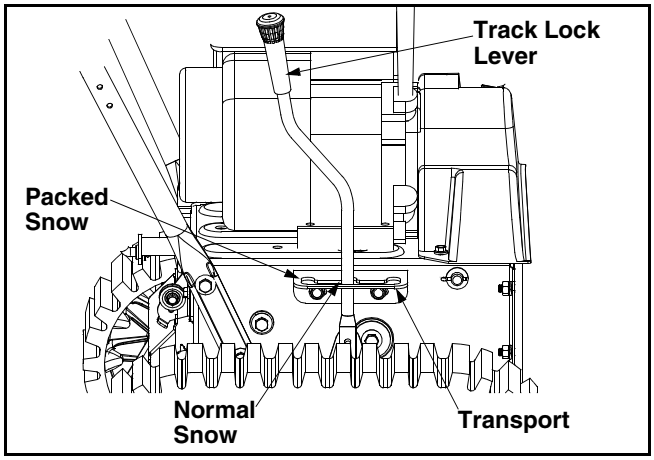

Figure 6

SECTION 4: OPERATING YOUR SNOW THROWER

Before Starting

WARNING: Read, understand, and follow all instructions and warnings on the machine and in this manual before operating.

Gas And Oil Fill-up

Service the engine with gasoline and oil as instructed in the separate engine manual packed with your snow thrower. **Read instructions carefully.**

WARNING: Use extreme care when handling gasoline. Gasoline is extremely flammable and the vapors are explosive. Never fuel machine indoors or while the engine is hot or running. Extinguish cigarettes, cigars, pipes an other sources of ignition.

- A plastic **cup** is provided inside the fuel fill opening to protect the tank during manufacturing. Remove and discard. Use the threaded fuel tank cap to close after fill-up.

To Start Engine

- Attach spark plug wire to spark plug. Make certain the metal loop on end of the spark plug wire (inside the boot) is fastened securely over the metal tip on the spark plug.
- Make certain the auger and drive controls are in the disengaged (up) position.
- Move throttle control up to FAST position. Insert ignition key into slot and snap in place. See Figure 5. **Do not turn key.**

NOTE: *Engine will not start unless ignition key is inserted into ignition slot in carburetor cover.*

Electric Starter

- Determine that your house wiring is a three-wire grounded system. Ask a licensed electrician if you are not certain.
- If your house wiring system is not a three-wire grounded system, do not use this electric starter under any conditions.



WARNING: The electric starter is equipped with a grounded three-wire power cord and plug and is designed to operate on 120 volt AC household current. It must be used with a properly grounded three-prong receptacle at all times to avoid the possibility of electric shock. Follow all instructions carefully prior to operating the electric starter.

- If your home electrical system is grounded, but a three-hole receptacle is not available, one should be installed by a licensed electrician before using the electric starter.
- If you have a grounded three-prong receptacle, proceed as follows:
- Move engine speed control to “Fast” position and set Choke Control to “Full” position.
- Push Primer three (3) times, making sure to cover vent hole when pushing.
- Connect power cord to switch box on engine. Plug the other end of power cord into a three-hole, grounded 120 volt AC receptacle.
- Push starter button on top of the engine to crank engine. As you crank the engine, move choke knob to FULL choke position.
- When engine starts, release starter button, and move choke gradually to OFF. If engine falters, move choke immediately to FULL and then gradually to OFF.
- When disconnecting the power cord, always unplug from the three-prong receptacle first and then from the snow thrower.

Recoil Starter

- Rotate choke knob to FULL choke position (cold engine start). If engine is warm, place choke in OFF position instead of FULL.
- Push primer button two or three times. If engine is warm, push primer button once only.

NOTE: *Always cover vent hole in primer button when pushing. Additional priming may be necessary for first start if temperature is below 15°F.*

- Grasp starter handle and pull rope out slowly, until it pulls slightly harder. Let rope rewind slowly.
- Pull starter handle rapidly. Do not allow handle to snap back. Allow it to rewind slowly while keeping a firm hold on the starter handle.
- Repeat the previous steps until engine starts.

To Stop Engine

- Run engine for a few minutes before stopping to help dry off any moisture on the engine.
- To help prevent possible freeze-up of starter, proceed as follows:

Electric Starter:

- Connect power cord to switch box on engine, then to 120 volt AC receptacle. With the engine running, push starter button and spin the starter for several seconds. The unusual sound made by spinning the starter will not harm engine or starter. Disconnect the power cord from receptacle first, and then from switch box.

Recoil Starter

- With engine running, pull starter rope with a rapid, continuous full arm stroke three or four times. Pulling the starter rope will produce a loud clattering sound, which is not harmful to the engine or starter.
- To stop engine, move throttle control to “stop” or “off” position.
- Remove ignition key (DO NOT turn key) to prevent unauthorized use of equipment.

NOTE: *Do not lose ignition key. Keep it in a safe place. Engine will not start without ignition key.*

- Wipe all snow and moisture from the carburetor cover in the area of the control levers. Also, move control levers back and forth several times.

To Engage Track Drive

- With the engine running near top speed, move the shift lever into one of the six FORWARD positions or two REVERSE positions. Select a speed appropriate for the snow conditions that exist.
- Squeeze the auger control and the augers will turn. Release it and the augers will stop.
- Squeeze the drive control and the snow thrower will move. Release it and drive motion will stop.
- NEVER move shift lever without releasing drive control.

To Engage Augers

- To engage the augers and start throwing snow, squeeze the auger control against the left handle. Release to stop the augers.

Auger Control Test

IMPORTANT: Perform the following test before operating your snow thrower for the first time and at the start of each winter season.

Check the adjustment of the auger control as follows:

- When the auger control is released and in the disengaged "up" position, the cable should have very little slack. It should NOT be tight.
- In a well-ventilated area, start the snow thrower engine as instructed earlier in this section under the heading Starting Engine. Make sure the throttle is set in the FAST position.
- While standing in the operator's position (behind the snow thrower), engage the auger.
- Allow the auger to remain engaged for approximately ten (10) seconds before releasing the auger control. Repeat this several times.
- With the engine running in the FAST position and the auger control in the disengaged "up" position, walk to the front of the machine.
- Confirm that the auger has completely stopped rotating and shows NO signs of motion.

IMPORTANT: If the auger shows ANY signs of rotating, immediately return to the operator's position and shut off the engine. Wait for ALL moving parts to stop before re-adjusting the auger control.

- To readjust the control cable, loosen the hex jam nut on the auger control cable "Z" fitting.
- Rotate the coupling end of the cable counterclockwise to provide more slack.
- Retighten the hex jam nut. See Figure 7.
- Repeat Auger Control Test to verify proper adjustment has been achieved. Repeat the previous steps to provide more slack in cable, if necessary.

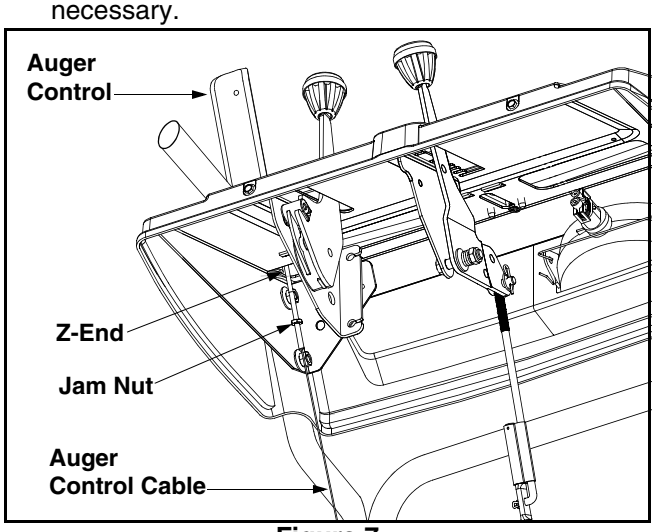

Figure 7

Clean-Out Tool

The clean-out tool is conveniently fastened to the rear of the auger housing with a mounting clip. Should snow and ice lodge itself in the chute assembly during operation, proceed as follows to safely clean the chute and chute opening:

- Release both the Auger Control and the Drive/ Auger Control Lock.
- Stop the engine by moving the throttle to the stop position.
- Remove the clean-out tool from the mounting clip.
- Use the shovel-shaped end of the clean-out tool to dislodge and scoop any snow and ice which has formed in and near the chute assembly.

WARNING: Never use your hands to clean snow and ice from the chute or auger housing. Use the clean-out tool or a stick to unclog.

- Refasten the clean-out tool to the mounting clip on the rear of the auger housing, and restart the engine.
- While standing in the operator's position (behind the snow thrower), engage the auger control for a few seconds to clear any remaining snow and ice from the chute assembly.

Drift Cutters (If Equipped)

Drift cutters should be used when operating the snow thrower in heavy drift conditions.

On models so equipped, drift cutters are assembled to the auger housing inverted. Remove the carriage bolts by unthreading the hex nuts which secure them, and reinstall the drift cutters in their proper position before operating the snow thrower. See Figure 8.

If your unit is not equipped with drift cutters, contact Customer Support as instructed on page 2 for information regarding price and availability.

Snow Thrower Model	Drift Cutter Kit
All models	OEM-390-679

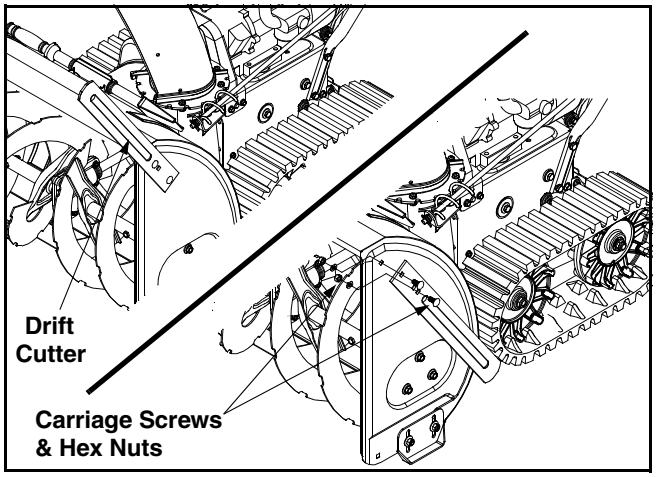

Figure 8

Operating Tips

NOTE: *Allow the engine to warm up for a few minutes. The engine will not develop full power until it reaches operating temperature.*

WARNING: The temperature of the muffler and the surrounding areas may exceed 150°F. Avoid these areas.

- For the most efficient snow removal, remove snow immediately after it falls.
- Discharge the snow downwind whenever possible.
- Slightly overlap each previous path.
- Set the skid shoes 1/4" below the shave plate for normal usage. The skid shoes may be adjusted upward (to lower the shave plate) for hard-packed snow. Adjust downward (to raise the shave plate) when using on gravel or crushed rock.
- Be certain to follow the precautions found in the To Stop Engine section to prevent possible freeze-up.
- Clean the snow thrower thoroughly after each use.

SECTION 5: ADJUSTING YOUR SNOW THROWER

WARNING: NEVER attempt to make any adjustments while the engine is running, except where specified in the operator's manual.

Auger Control

Refer to Auger Control Test in the Operating Section to adjust the auger control.

Drive Control and Shift Lever

To check the adjustment of the drive control and shift lever, proceed as follows:

- To check the adjustment of the traction control clutch and shift lever, proceed as follows:
- With the engine off, move the shift lever all the way forward to the highest speed. With the drive control released, push the snow thrower forward. The unit should roll forward. Then engage the drive control. The wheels should stop turning.
- Now release the drive control and push the unit again.
- Move the shift lever back to the fast reverse position then all the way forward again. There should be no resistance in the shift lever, and the wheels should keep turning.
- If you have resistance when moving the shift lever or the wheels stop when they should not, loosen the jam nut on the drive control cable and unthread the cable one turn.
- If the wheels do not stop when you engage the drive control, loosen the jam nut on the drive control cable and thread the cable in one turn.
- Recheck the adjustment and repeat as necessary. Tighten the jam nut to secure the cable when correct adjustment is reached.

If you are uncertain that you have reached the correct adjustment, proceed as follows:

WARNING: Drain the gasoline out of the snow thrower's tank, or place a piece of plastic film under the gas cap to avoid spillage BEFORE making the adjustment.

- Tip the snow thrower forward, allowing it to rest on the auger housing. See Figure 9.

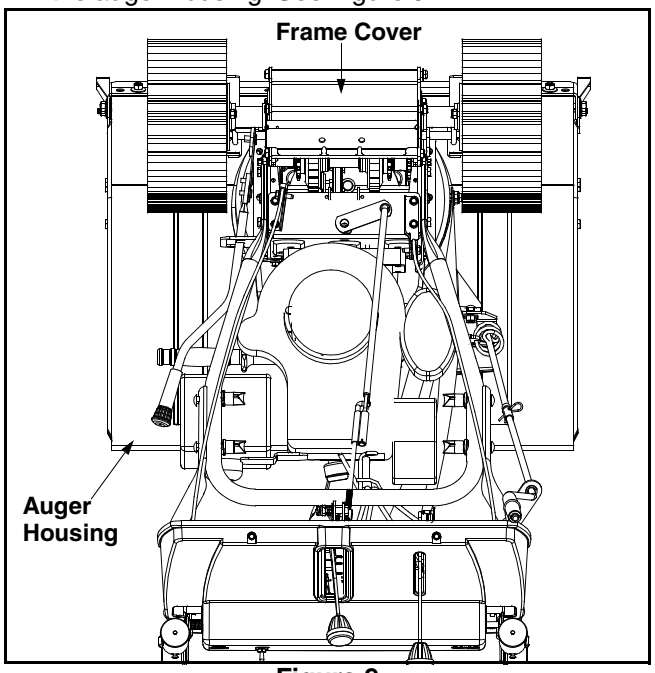

Figure 9

- Remove the frame cover underneath the snow thrower by removing the six self-tapping screws.
- With the drive control released, there must be clearance between the friction wheel and the drive plate in all positions of the shift lever.
- With the drive control engaged, the friction wheel must contact the drive plate. See Figure 10.

If adjustment is necessary:

- Loosen the jam nut on the drive cable. Adjust the cable as necessary. Refer to Figure 7.
- Retighten the jam nut to secure the cable when correct adjustment is reached.
- Reassemble the frame cover.

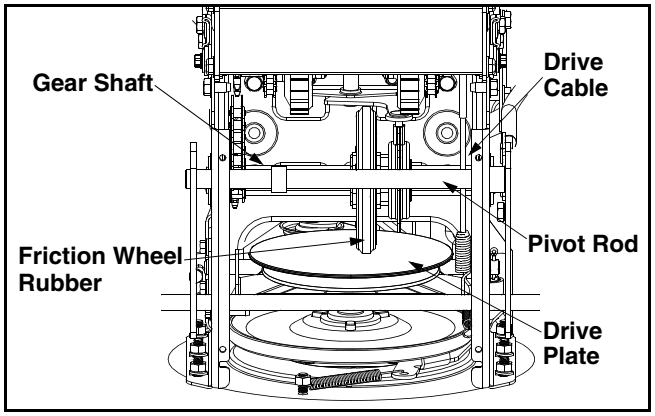

Figure 10

NOTE: *If you placed plastic film under the gas cap, be certain to remove it before operating the snow thrower.*

Shift Rod Adjustment

To adjust the shift rod, proceed as follows:

- Remove the hairpin clip and slide the shift rod connector up, to separate the upper shift rod from the lower shift rod. See Figure 11.
- Place the shift lever into the sixth (6) position.
- Rotate the shift arm clockwise (from the operator's position) as far as it will go.
- Thread the upper shift rod downward until the elbow on its lower end aligns with the hole found in the lower shift rod.

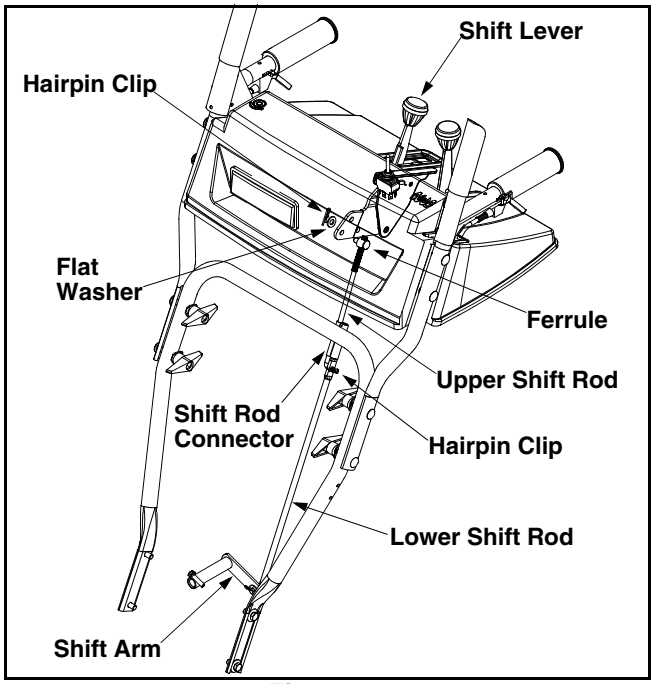

Figure 11

- Reconnect the upper shift rod to the lower shift rod by reinserting the hairpin clip removed earlier and sliding the shift rod connector back down into place.

IMPORTANT: Make certain to check for correct adjustment of the shift rod as instructed under Final Adjustments in the Assembly Section, before operating the snow thrower

Skid Shoes

The space between the shave plate and the ground can be adjusted. See Figure 12.

- For close snow removal on a smooth surface, raise skid shoes higher on the auger housing.
- Use a middle or lower position when the area to be cleared is uneven.

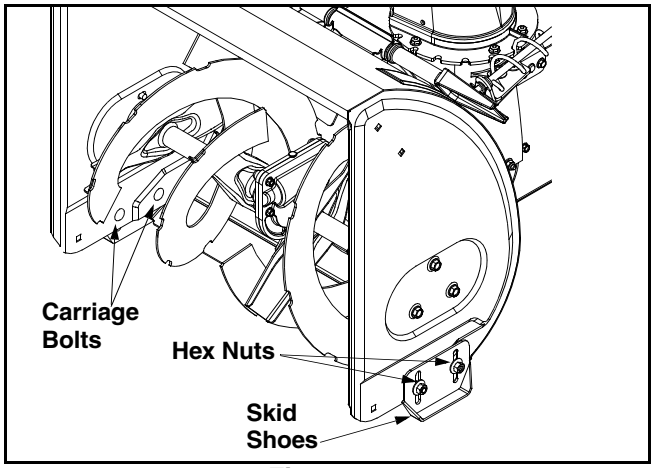

Figure 12

WARNING: Do not operate this snow thrower on gravel as loose gravel can be easily picked up and thrown by the auger causing injury to the operator and/or damage to the snow thrower.

- Adjust skid shoes by loosening the four flange lock nuts and carriage bolts. Move skid shoes to desired position.
- Make certain the entire bottom surface of skid shoe is against the ground to avoid uneven wear on the skid shoes. Retighten nuts and bolts securely.

Carburetor

- Minor carburetor adjustment may be required to compensate for differences in fuel, temperature, altitude and load.
- Refer to the separate engine manual, packed with your unit, for carburetor adjustment information.

SECTION 6: MAINTAINING YOUR SNOW THROWER

WARNING: Before lubricating, repairing, or inspecting, disengage all controls and stop engine. Wait until all moving parts have come to a complete stop. Disconnect spark plug wire and ground it against the engine to prevent unintended starting. Always wear safety glasses during operation or while performing any adjustments or repairs.

Lubrication

Engine

Refer to the separate engine manual packed with your unit for all engine lubrication instructions.

WARNING: If any adjustments need to be made to the engine while the engine is running (e.g. carburetor), keep clear of all moving parts. Be careful of muffler, engine and other surrounding heated surfaces.

Gear Shaft

Lubricate the gear shaft with 6-n-1 grease at least once a season or after every 25 hours of operation (available at automotive stores, or order part number 737-0170). Refer to Figure 10.

IMPORTANT: Keep all grease and oil off of the rubber friction wheel and aluminum drive plate.

Chute Directional Control

- The worm gear on the chute directional control should be greased with multipurpose automotive grease.

Gear Case

The gear case is lubricated with grease at the factory and it does not require checking. If disassembled for any reason, lubricate with 2 ounces of Shell Alvania grease EPR00, part number 737-0168. Before reassembling, remove old sealant and apply new sealant. See Figure 13.

IMPORTANT: Do not overfill the gear case, since damage to the seals could result. Be sure the vent plug is free of grease in order to relieve pressure.

Auger Shaft

At least once a season, remove the shear bolts on the auger shaft. Spray lubricant inside the shaft and lubricate the plastic auger bearings at least once a season. See Figure 13.

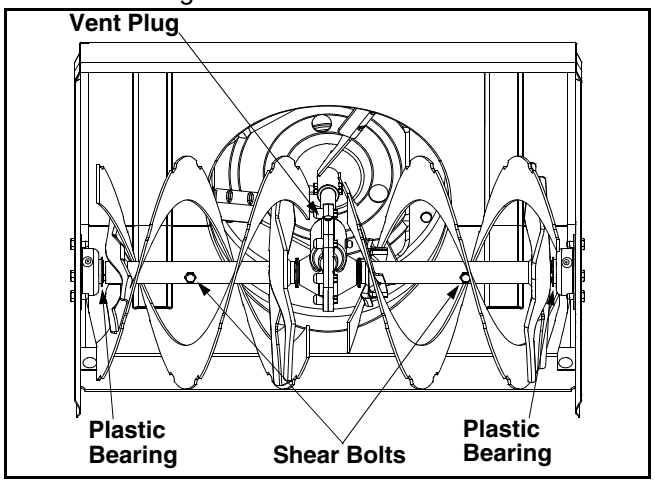

Figure 13

Drive and Shifting Mechanism

Lubricate at least once a season or after every 25 hours of operation. Remove the rear cover, lubricate any chains, sprockets, gears, bearings, shafts, and shifting mechanism at least once a season. Use engine oil or a spray lubricant. **Avoid getting oil on the friction wheel rubber and aluminum drive plate.** Refer to Figure 10.

There is a grease fitting on the top of the axle shaft which drives the rear track drive wheels on both sides of the unit. Grease these fittings every 25 hours or once a season.

Drive / Auger Control Lock

The cams on the ends of the control rods which interlock the drive and auger controls must be lubricated at least once a season or every 25 hours of operation. The cams can be accessed beneath the handle panel. Use a multi-purpose automotive grease.

SECTION 7: SERVICING YOUR SNOW THROWER

WARNING: Before servicing, repairing, or inspecting, disengage all clutch levers and stop engine. Wait until all moving parts have come to a complete stop. Disconnect spark plug wire and ground it against the engine to prevent unintended starting. Always wear safety glasses during operation or while performing any adjustments or repairs.

Engine

Refer to the separate engine manual packed with your unit for all engine maintenance procedures.

Augers

- The augers are secured to the spiral shaft with two shear bolts and hex lock nuts. If you hit a hard foreign object or ice jam, the snow thrower is designed so that the bolts may shear. Refer to Figure 13.
- If the augers will not turn, check to see if the bolts have sheared. Replacement shear bolts and hex lock nuts have been provided with the snow thrower. When replacing bolts, spray an oil lubricant into shaft before inserting new bolts.

IMPORTANT: NEVER replace the auger shear bolts with standard hex bolts. Any damage to the auger gearbox or other components as a result of doing so will NOT be covered by your snow thrower's warranty.

Shave Plate and Skid Shoes

- The shave plate and skid shoes on the bottom of the snow thrower are subject to wear. They should be checked periodically and replaced when necessary.
- To remove skid shoes, remove the four carriage bolts and flange lock nuts which attach them to the snow thrower. Reassemble new skid shoes with the four carriage bolts and flange lock nuts. See Figure 14.

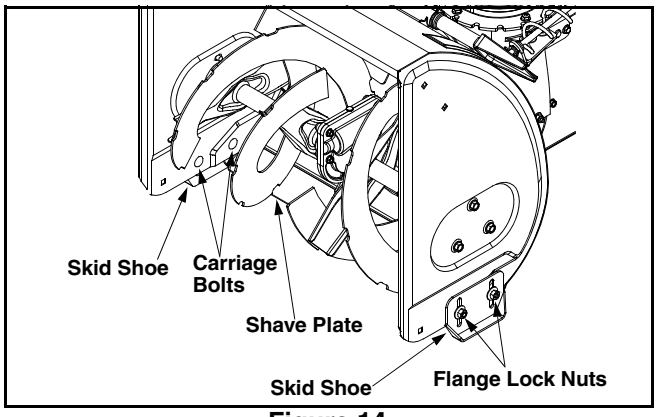

Figure 14

Belt Removal And Replacement

Auger Belts

NOTE: *It is necessary to remove both belts in order to change either one. If changing just one belt, be certain to check the condition of the other belt.*

- Remove the plastic belt cover at the front of the engine by removing the two self-tapping screws. See Figure 15.
- Drain the gasoline from the snow thrower, or place a piece of plastic film under the gas cap.
- Tip the snow thrower up and forward so that it rests on its auger housing.

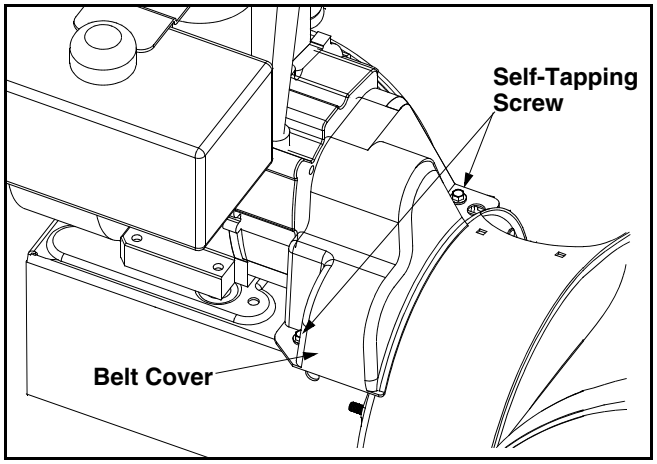

Figure 15

- Remove the six self-tapping screws from the frame cover underneath the snow thrower.
- Roll the front and rear auger belts off the engine pulley. See Figure 16.
- Unhook the idler spring from the hex bolt on the auger housing. See Figure 17.
- Back out the stop bolt until the support bracket rests on the auger pulley.

NOTE: *Loosening the six nuts that connect the frame to the auger housing may aid in belt removal.*

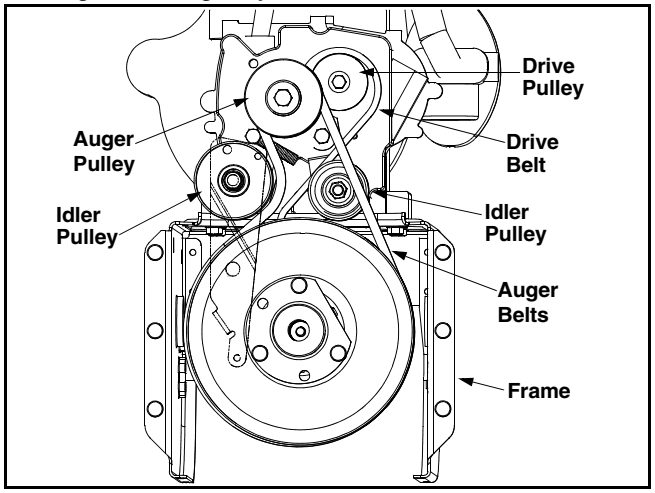

Figure 16

- Lift the auger belt from the auger pulley, and slip belt between the support bracket and the auger pulley. Repeat this step for the front auger belt.
- Replace the auger drive belts by following instructions in reverse order.

NOTE: *If you placed plastic film under the gas cap, be certain to remove it before operating the snow thrower.*

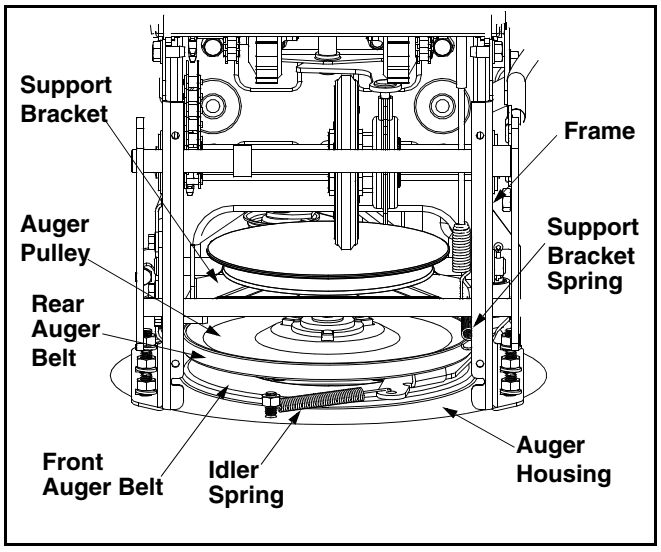

Figure 17

Drive Belt

- Follow the first four steps of the instructions for servicing the auger belts.
- Pull the idler pulley up and lift the belt off the engine pulley and friction wheel disc. See Figure 16.
- Back out the stop bolt until the support bracket rests on the auger pulley. See Figure 18.
- Slip the belt between the friction wheel and drive disc. Remove and replace the belt. Reassemble following the instructions in reverse order.

NOTE: *The support bracket must rest on the stop bolt after the new belt has been assembled.*

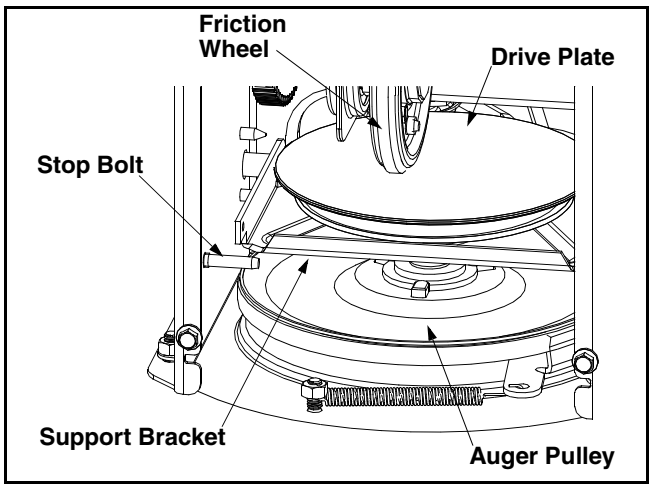

Figure 18

Replacing Friction Wheel Rubber

The rubber on the friction wheel is subject to wear and should be checked after 25 hours of operation, and periodically thereafter. Replace the friction wheel rubber if any signs of wear or cracking are found.

- Drain the gasoline from the snow thrower.
- Tip the snow thrower up and forward, so that it rests on the housing. Refer to Figure 9.
- Remove six self-tapping screws from the frame cover underneath the snow thrower.
- Using a 7/8" wrench to hold the shaft, loosen, but do not completely remove, the hex bolt and bell washer on the left end of gear shaft. See Figure 19.
- Lightly tap the hex nut to dislodge the ball bearing from the right side of frame before removing the hex nut and bell washer from left end of shaft.

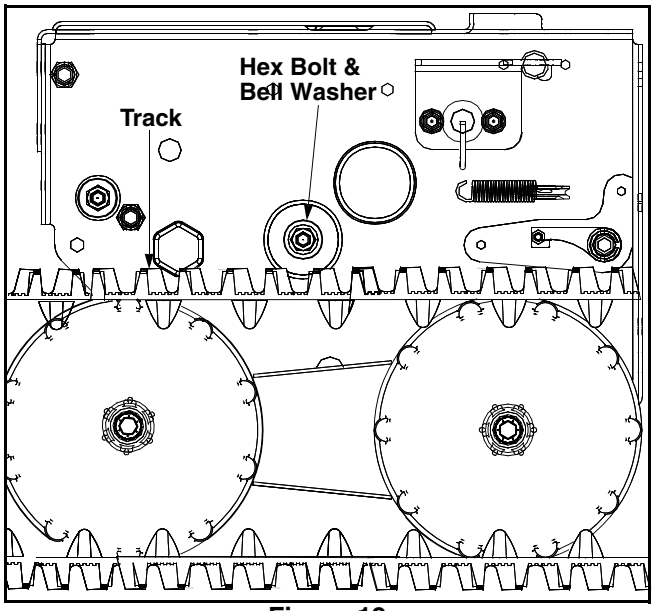

Figure 19

Move the gear shaft to the right and slide the friction wheel assembly from the shaft. See Figure 20.

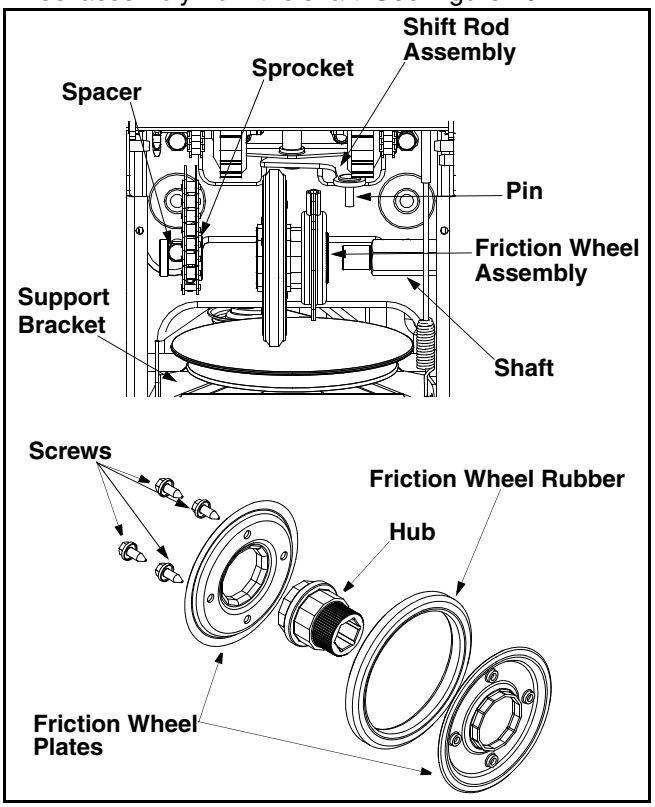

Figure 20

- Remove the four screws from the friction wheel assembly. See Figure 20.
- Remove the friction wheel rubber from between the friction wheel plates.
- Reassemble new friction wheel rubber to the friction wheel plates and hub, tightening the four screws in rotation and with equal force.
- Position the friction wheel assembly up onto the pin of the shift rod assembly, and slide the shaft through the assembly. Reassemble in reverse order.

Off-season Storage

WARNING: Never store the machine or fuel container indoors where there is an open flame, spark, or pilot light such as on water heater, furnace, clothes dryer, or other gas appliance.

WARNING: Drain fuel into an approved container outdoors, away from an open flame. Allow engine to cool. Extinguish cigarettes, cigars, pipes, and other sources of ignition prior to draining fuel. Fuel left in engine for extended periods deteriorates and will cause starting problems.

If unit is to be stored over 30 days, prepare for storage as follows:

- Remove gasoline from carburetor and fuel tank to prevent gum deposits from forming on these parts and causing possible malfunction of engine.
- Run engine until fuel tank is empty and engine stops due to lack of fuel.
- Drain carburetor by pressing upward on bowl drain, located below the carburetor cover.

NOTE: *Fuel stabilizer is an acceptable alternative in minimizing the formation of fuel gum deposits during storage. Do not drain carburetor if using fuel stabilizer.*

- Wipe equipment with an oiled rag to prevent rust.
- Remove spark plug and pour one ounce of engine oil through spark plug hole into cylinder. Cover spark plug hole with rag. Crank engine several times to distribute oil. Replace spark plug.
- Follow the lubrication recommendations found in the Maintenance Section.
- Always store the snow thrower in a clean, dry area.

NOTE: *When storing any type of power equipment in an unventilated or metal storage shed, care should be taken to rust proof the equipment. Using a light oil or silicone, coat the equipment, especially any chains, springs, bearings and cables.*

SECTION 8: TROUBLESHOOTING

Problem	Cause	Remedy
Engine fails to start	1. Fuel tank empty, or stale fuel. 2. Blocked fuel line. 3. Choke not in the ON position 4. Faulty spark plug. 5. Safety key not in ignition switch on engine. 6. Spark plug wire disconnected. 7. Primer button not being used properly. 8. Fuel shut-off valve closed (if equipped).	1. Fill tank with clean, fresh gasoline. Fuel becomes stale after thirty days. 2. Clean the fuel line. 3. Move switch to the ON position 4. Clean, adjust gap or replace. 5. Insert the key fully into the switch. 6. Connect spark plug wire. 7. Refer to the engine manual. 8. Open fuel shut-off valve.
Engine runs erratic	1. Unit running on CHOKE. 2. Blocked fuel line or stale fuel. 3. Water or dirt in the fuel system.	1. Move the choke lever to OFF position. 2. Clean the fuel line; fill the tank with clean, fresh gasoline. 3. Drain the fuel tank and carburetor. Refill with fresh fuel.
Loss of power	1. Spark plug wire loose. 2. Gas cap vent hole plugged.	1. Connect and tighten spark plug wire. 2. Remove ice and snow from gas cap. Be certain vent hole is clear.
Excessive vibration	1. Loose parts or damaged auger.	1. Stop the engine immediately and disconnect the spark plug wire. Tighten all bolts and nuts. If vibration continues, have the unit serviced by an authorized service dealer.
Unit fails to propel itself	1. Drive control cable in need of adjustment. 2. Drive belt loose or damaged.	1. Adjust drive control cable. Refer to Making Adjustment Section. 2. Replace drive belt. Refer to the Service Section.
Unit fails to discharge snow	1. Chute assembly clogged. 2. Shear bolt sheared. 3. Foreign object lodged in auger. 4. Auger control cable in need of adjustment. 5. Auger belt loose or damaged. 6. Shear bolt(s) sheared.	1. Stop engine and disconnect spark plug wire. Clean chute and inside of auger housing with clean-out tool or a stick. 2. Replace shear bolt. 3. Stop engine immediately and disconnect spark plug wire. Remove object from auger. 4. Adjust auger control cable. Refer to the Making Adjustments Section. 5. Refer to Service Section. 6. Replace shear bolt(s).

NOTES

SECTION 9: PARTS LIST FOR MODEL 7L3

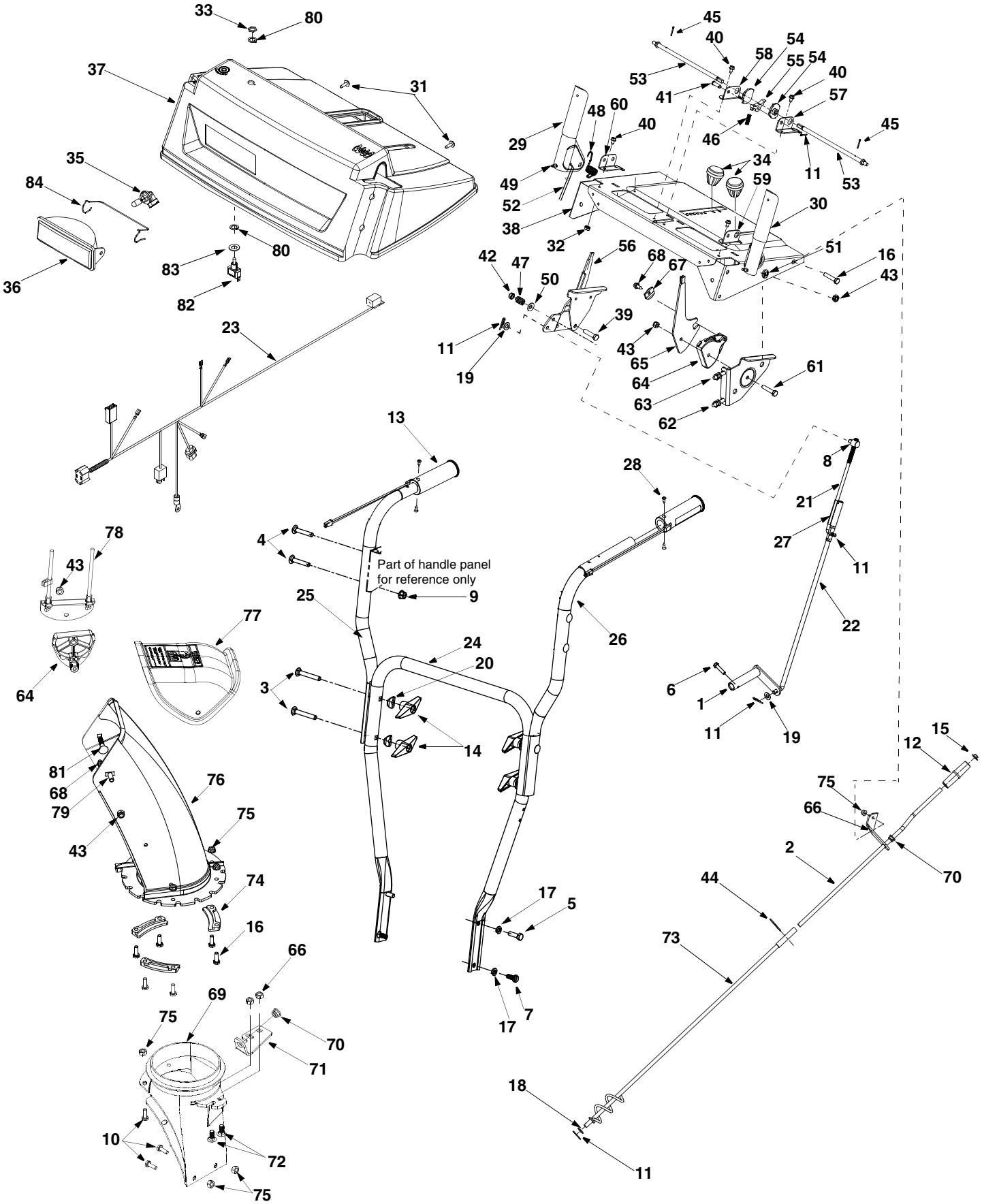

Model 7L3

Ref. No.	Part No.	Part Description	Ref. No.	Part No.	Part Description
1.	684-0008A	Shift Arm Assembly	43.	712-04063	Flange Lock Nut
2.	747-0737	Chute Directional Control	44.	714-0145	Click Pin
3.	710-0449	Carriage Screw 5/16-18 x 2.25	45.	714-0507	Cotter Pin
4.	710-0458	Carriage Bolt 5/16-18 x 1.75	46.	732-0145	Compression Spring
5.	710-0643	Hex Bolt 5/16-18 x 1.0	47.	732-0193	Compression Spring
6.	710-0788	Tt Screw 1/4-20 x 1.0	48.	732-0746	Torsion Spring
7.	710-1880	Hex Bolt 5/16-18 x 0.75	49.	735-0199A	Rubber Bumper
8.	711-0677	Ferrule	50.	736-0105	Bell Washer
9.	712-04063	Flange Lock Nut	51.	736-0509	Flat Washer
10.	710-0703	Carriage Screw, 1/4-20 x.75	52.	746-0778	Drive Cable Z- Fitting
11.	714-0104	Hairpin Clip	53.	747-0877	Cam Rod
12.	720-0201A	Chute Directional Control Knob	54.	748-0362	Handle Lock Cam
13.	725-1757	Heated Grip	55.	748-0363	Handle Lock Pawl
14.	720-0284	Handle Knob Assembly	56.	784-5619A	Shift Handle
15.	726-0100	Push Cap	57.	784-5679	Handle Support Bracket LH
16.	710-0597	Hex Screw, 1/4-20 x 1.00	58.	784-5680	Handle Support Bracket RH
17.	736-0119	Lock Washer	59.	784-5681	Support Bracket LH
18.	736-0185	Flat Washer	60.	784-5682	Support Bracket RH
19.	736-0275	Flat Washer	61.	710-0805	Hex Bolt 5/16-18 x 1.5
20.	736-0451	Saddle Washer	62.	746-0901	Chute Deflector Cable w/Clip
21.	747-0620A	Upper Shift Rod	63.	746-0896	Chute Deflector Control Cable
22.	747-0621	Lower Shift Rod	64.	731-1313C	Chute Cable Guide
23.	629-1094	Heated Grips Harness Ass'y	65.	784-5604	Chute Distance Control
24.	749-04138	Lower Handle	66.	705-5266	Chute Directional Control Bracket
25.	749-0952A	Upper Handle RH	67.	736-0506A	Special Washer
26.	749-0953A	Upper Handle LH	68.	710-0895	Hi-Lo Screw 1/4-15 x 0.75
27.	750-0963	Shift Rod Connector	69.	731-1379C	Chute Adapter
28.	710-0837	Screw, #10-16 x.625	70.	741-0475	Plastic Bushing
29.	684-0036A	Handle Engagement Assembly RH	71.	784-5647	Chute Directional Control Bracket
30.	684-0037B	Handle Engagement Assembly LH	72.	710-0451	Carriage Bolt 5/16-18 x 0.75
31.	710-1003	B Screw #10-16 x 0.625	73.	684-0053B	Lower Chute Directional Control
32.	712-0271	Hex Sems Nut 1/4-20	74.	731-0851A	Flange Keeper
33.	712-0693	Jam Nut, 15/32-32	75.	712-04064	Flange Lock Nut 1/4-20
34.	720-0232	Shift Knob	76.	731-1300B	Lower Chute
35.	725-1759	Halogen Lamp, 50W, 12V	77.	731-04427A	Upper Chute
36.	725-1672	Lamp Housing	78.	784-5594	Cable Bracket
37.	731-2564	Handle Panel	79.	710-04071	Carriage Bolt 5/16-18 x 1.0
38.	684-0102	Handle Panel Assembly w/Tilt	80.	716-0398	Toggle Switch Lock Ring
39.	710-0459A	Hex Bolt 3/8-24 x 1.5	81.	710-0262	Carriage bolt 5/16-18 x 1.5
40.	710-0599	TT Screw 1/4-20 x 0.5	82.	725-1756	Single Throw Toggle Switch
41.	711-0653	Clevis Pin	83.	736-0226	Flat Washer
42.	712-0116	Jam Lock Nut 3/8-24	84.	747-1136	Headlight Retainer

Model 7L3

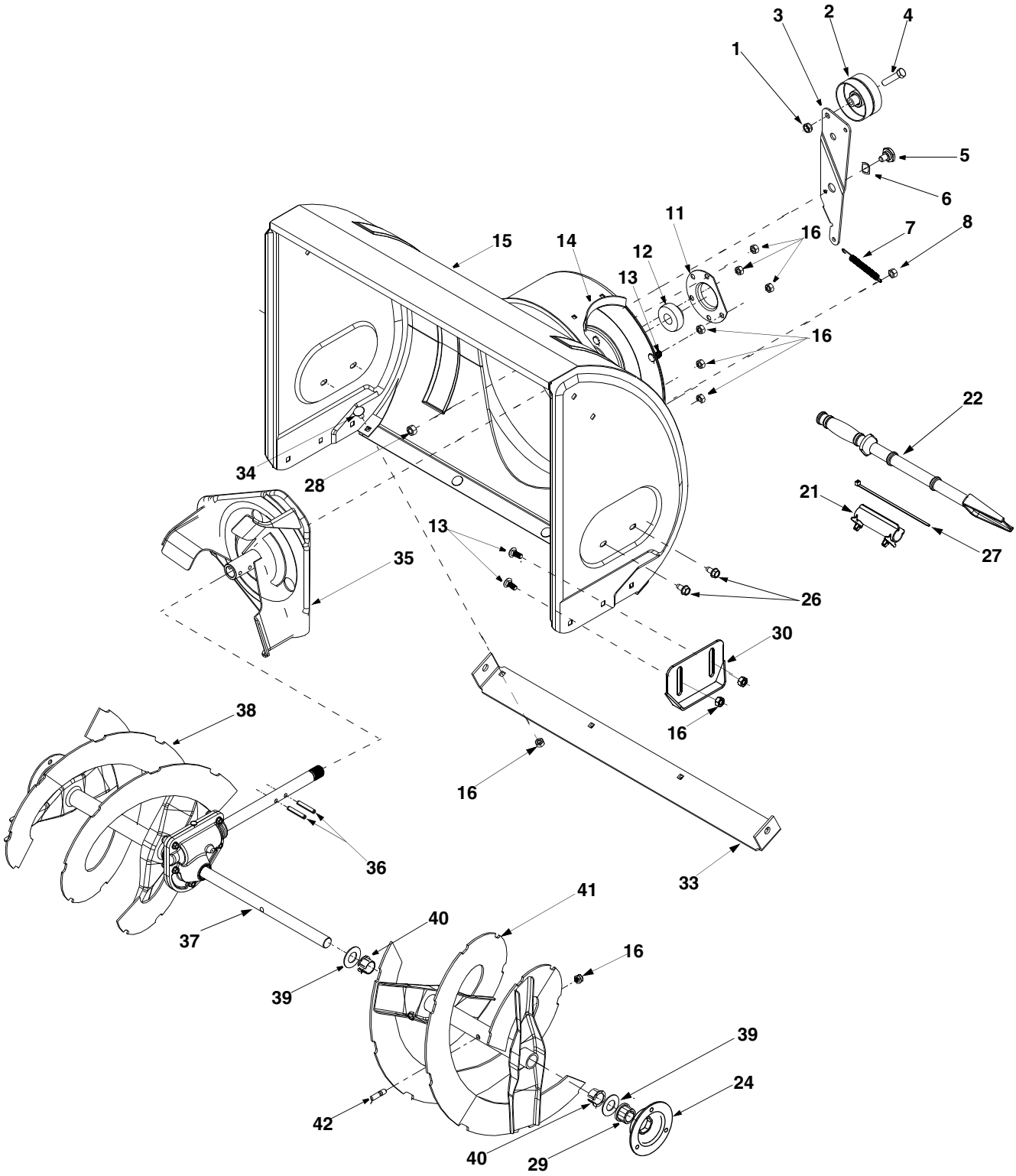
1
2
3
4
5
6
7
8
11
12
13
14
15
16
16
16
22
21
27
34
28
35
13
26
30
16
38
16
36
33
37
41
40
16
39
39
24
42
40
29

Model 7L3

Ref. No.	Part No.	Part Description	Ref. No.	Part No.	Part Description
1.	712-0116	Lock Jam Nut 3/8-24	24.	790-00087	Bearing Housing
2.	756-0178	Flat Idler	26.	710-0726	Hex Screw 5/16-12
3.	784-5632B	Auger Idler Arm	27.	725-0157	Cable Tie
4.	710-0459A	Hex Cap Screw 3/8-24 x 1.50	28.	712-04065	Flange Lock Nut 3/8-16
5.	738-0281	Shoulder Screw	29.	741-0245	Hex Flange Bearing
6.	736-0174	Wave Washer	30.	784-5580	Skid Shoe
7.	732-0611	Extension Spring	33.	790-00118	Shave Plate
8.	712-3068	Hex Nut 5/16-18	34.	710-0451	Carriage Bolt 5/16-18 x 1.00
11.	05931A	Housing	35.	684-0065	Impeller Assembly
12.	741-0309	Ball Bearing	36.	715-0114	Pin
13.	710-0451	Carriage Bolt, 5/16-18 x.75	37.	618-0122B	Gear Assembly Complete, 28”
14.	705-5226	Chute Reinforcement	38.	605-5196A	Spiral Assembly RH
15.	684-04129	Auger Housing Assembly 28”	39.	736-0188	Flat Washer
16.	712-04063	Flange Lock Nut 5/16-18	40.	741-0493A	Flange Bushing
21.	731-2635	Clean-Out Tool Mount	41.	605-5197A	Spiral Assembly LH
22.	731-2643	Clean-Out Tool	42.	710-0890A	Shear Bolt 5/16-18 x 1.5

NOTE: For **painted parts**, please refer to the list of color codes below. Please add the applicable color code, wherever needed, to the part number to order a replacement part. For instance, if a part numbered 700-xxxx is painted Yard-Man Green, the part number to order would be 700-xxxx-0665.

Yard-Man Green: 0665
Yard-Man Yellow: 0674
Powder Black: 0637

Model 7L3

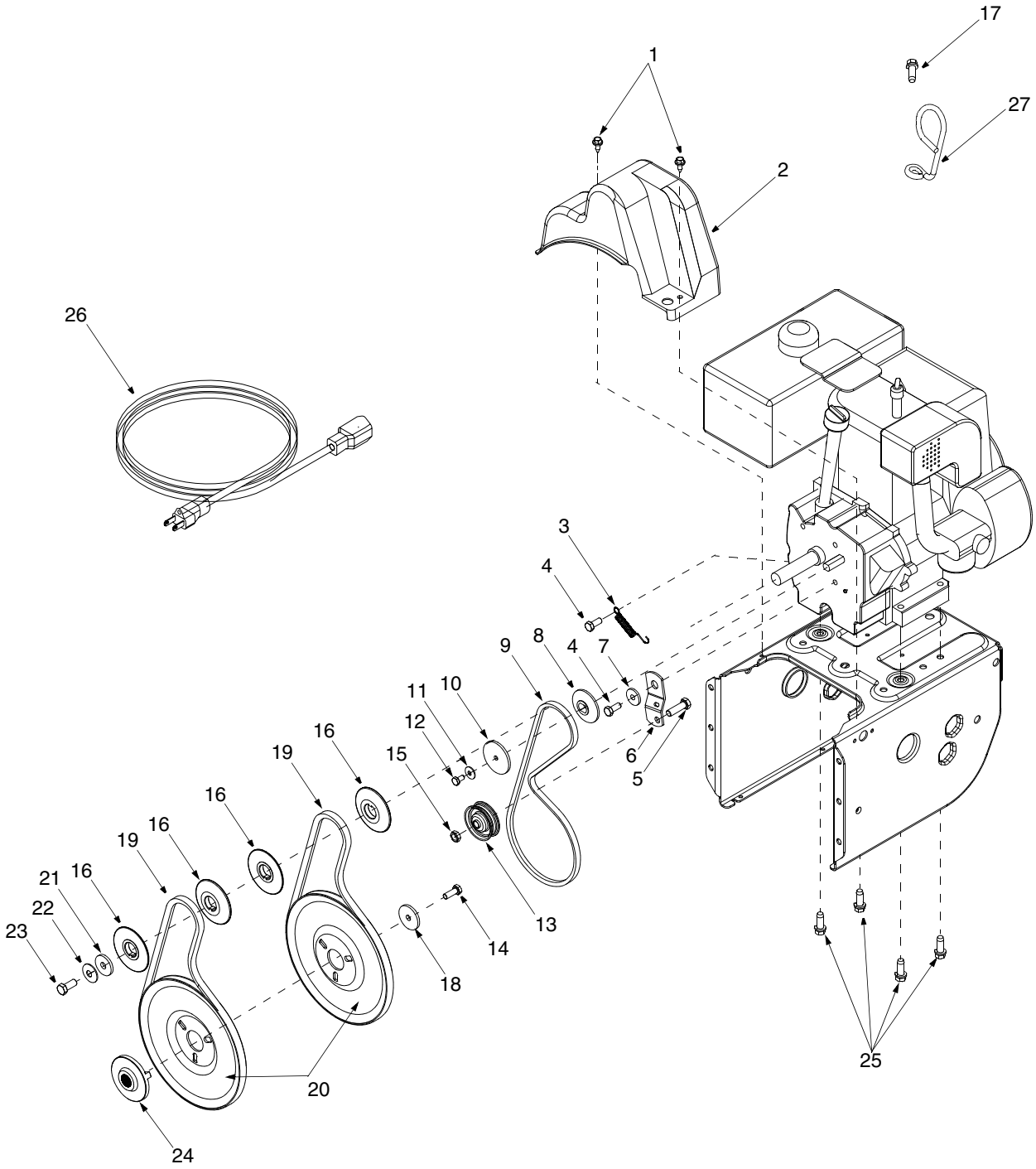
17
1
27
2
26
3
4
9
8
4
7
11
10
12
6
5
16
19
15
16
16
19
16
21
22
23
13
14
18
20
24
25

Model 7L3

Ref. No.	Part No.	Part Description
1.	710-0896	Hex Washer Screw 1/4-14 x.625
2.	731-1324	Belt Cover
3.	732-0710	Extension Spring
4.	710-0627	Hex Screw 5/16-24 x.75
5.	710-3005	Hex Cap Screw 3/8-16 x 1.25
6.	05896A	Drive Clutch Idler Bracket
7.	748-0234	Shoulder Spacer
8.	756-0987	Pulley Half
9.	754-0346	V-Belt
10.	756-0986	Pulley Half
11.	736-0270	Bell Washer
12.	710-0230	Hex Cap Screw 1/4-28 x.50
13.	756-0313	Flat Idler
14.	710-1245B	Lock Hex Cap Screw 5/16-24
15.	712-0181	Lock Jam Nut 3/8-16
16.	756-0569	Pulley Half
17.	710-0602	Self Tapping Screw, 5/16-18 x 1.00
18.	736-0505	Flat Washer
19.	754-0430B	Belt
20.	756-0967	Auger Pulley
21.	736-0247	Flat Washer 3/8 x 1.25 OD
22.	736-0331	Bell Washer
23.	710-0696	Hex Cap Screw 3/8-24
24.	748-0360	Adapter Pulley
25.	710-0654A	Hex Screw 3/8-16 x 1.0
26.	629-0071	Extension Cord
27.	732-0705	Cable Control Wire

IMPORTANT: For a proper working machine, use Factory Approved Parts.
V-BELTS are specially designed to engage and disengage safely. A substitute (non OEM) V-Belt can be dangerous by not disengaging completely

Model 7L3

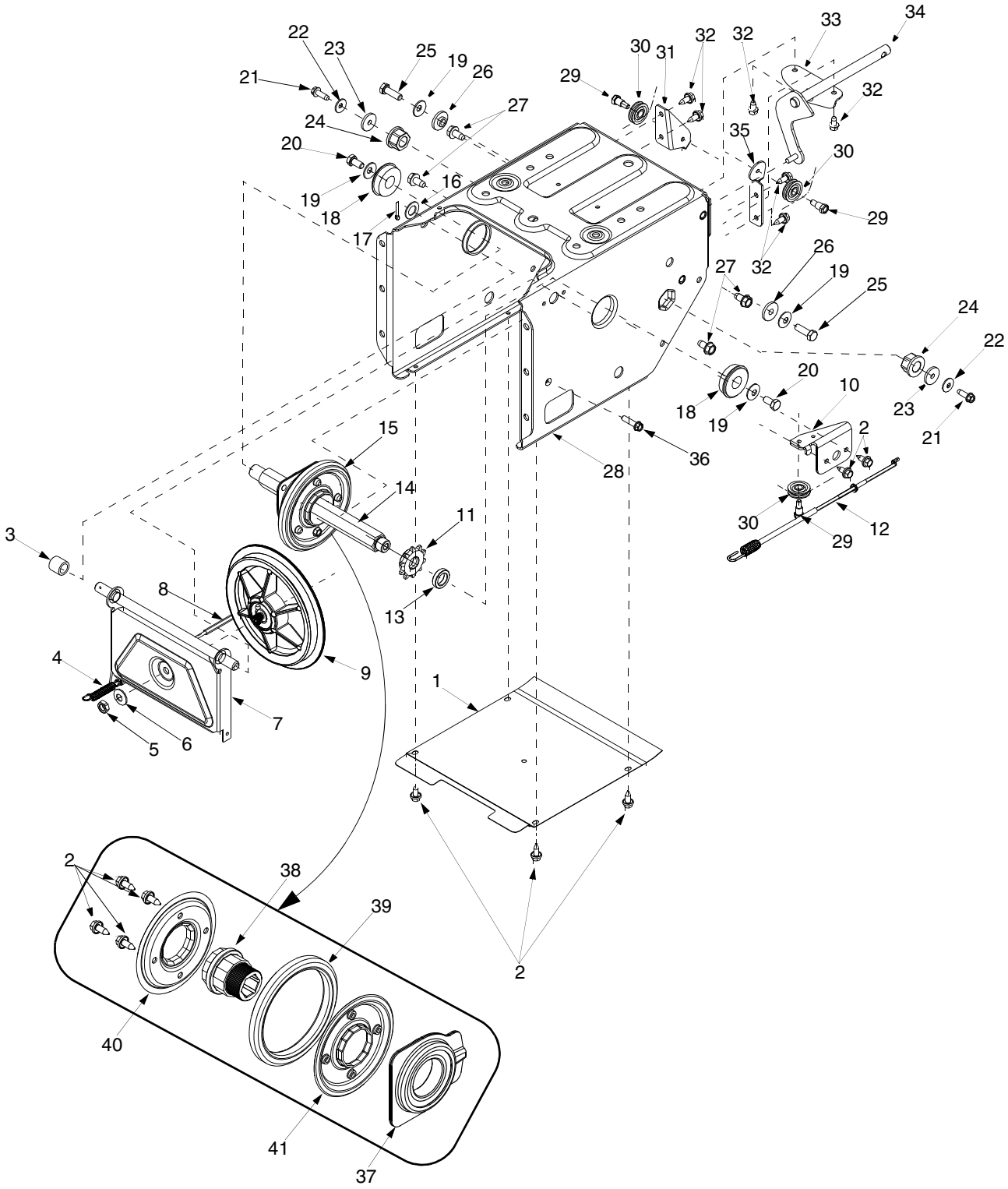
22
23
25
19
26
21
27
24
20
16
19
18
17
30
31
32
32
33
34
29
32
35
30
29
32
26
27
19
25
24
22
20
18
19
10
23
21
2
36
28
15
14
11
3
8
13
9
4
7
5
6
1
2
38
39
40
41
37
2
12
30
29

Model 7L3

Ref. No.	Part No.	Part Description
1.	784-5648	Frame Cover
2.	710-0896	AB Screw 1/4-14 x.625
3.	748-0190	Spacer
4.	732-0264	Extension Spring
5.	712-0711	Jam Nut 3/8-24
6.	736-0105	Bell Washer
7.	684-0021	Friction Whl Support Bracket Ass'y
8.	746-0898B	Drive Cable
9.	656-0012A	Friction Disc
10.	784-5689A	Front Support Guide Bracket
11.	713-0413	10T Sprocket
12.	746-0897	Auger Cable
13.	750-0997	Spacer
14.	711-1042	Hex Track Drive Shaft
15.	684-0042C	Friction Wheel Assembly
16.	736-0160	Flat Washer
17.	714-0474	Cotter Pin
18.	741-0563	Ball Bearing
19.	736-0242	Bell Washer
20.	710-0538	Hex Cap Screw 5/16-18 x.625
21.	710-0875	Tap Screw 1/4-20 x.75

Ref. No.	Part No.	Part Description
22.	736-0270	Bell Washer.265 ID x.75 OD
23.	736-0176	Flat Washer 1/4 ID x.93 OD
24.	741-1111	Hex Flange Bearing
25.	710-0643	Hex Cap Screw 5/16-18 x 1"
26.	748-0234	Shoulder Spacer
27.	710-0726	Tap Screw 5/16-12 x.750
28.	684-0031	Frame Assembly
29.	738-0924	Hex Screw 1/4-28 x.375
30.	756-0625	Cable Roller
31.	784-5688	Drive Cable Guide Bracket
32.	710-0599	Tap Screw 1/4-20 x.5
33.	784-5590	Shift Frame Bracket
34.	684-0014B	Track Shift Rod Assembly
35.	784-5687A	Auger Cable Guide Bracket
36.	710-0809	Tap Screw 1/4-20 x 1.250
37.	618-0063A	Friction Wheel Bearing Ass'y
38.	718-0301A	Friction Wheel Hub
39.	735-0243B	Friction Wheel Rubber
40.	790-00011	Friction Plate
41.	790-00010	Friction Plate

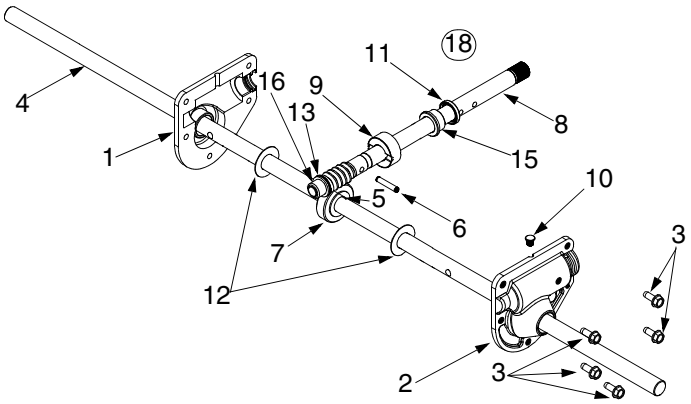

REF. NO.	PART NO.	DESCRIPTION
1.	618-0123	RH Housing
2.	618-0124	LH Housing
3.	710-0642	Self Tapping Screw, 1/4-20 x.75
4.	711-0910A	Auger Axle
5.	714-0161	Hi-Pro Key
6.	715-04021	Dowel Pin
7.	717-0528A	Worm Gear, 20-tooth
8.	717-0526	Worm Shaft
9.	718-04071	Thrust Collar
10.	721-0325	Grease Plug
11.	721-0327	Grease Seal
12.	736-0351	Flat Washer
13.	736-3084	Flat Washer
15.	741-0662	Flange Bearing
16.	741-0663	Flange Bearing
18.	618-0122B	Gear Assembly Complete

NOTE: For **painted parts**, please refer to the list of color codes below. Please add the applicable color code, wherever needed, to the part number to order a replacement part. For instance, if a part numbered 700-xxxx is painted Yard-Man Green, the part number to order would be 700-xxxx-0665.

Yard-Man Green: 0665
Yard-Man Yellow: 0674
Powder Black: 0637

Model 7L3

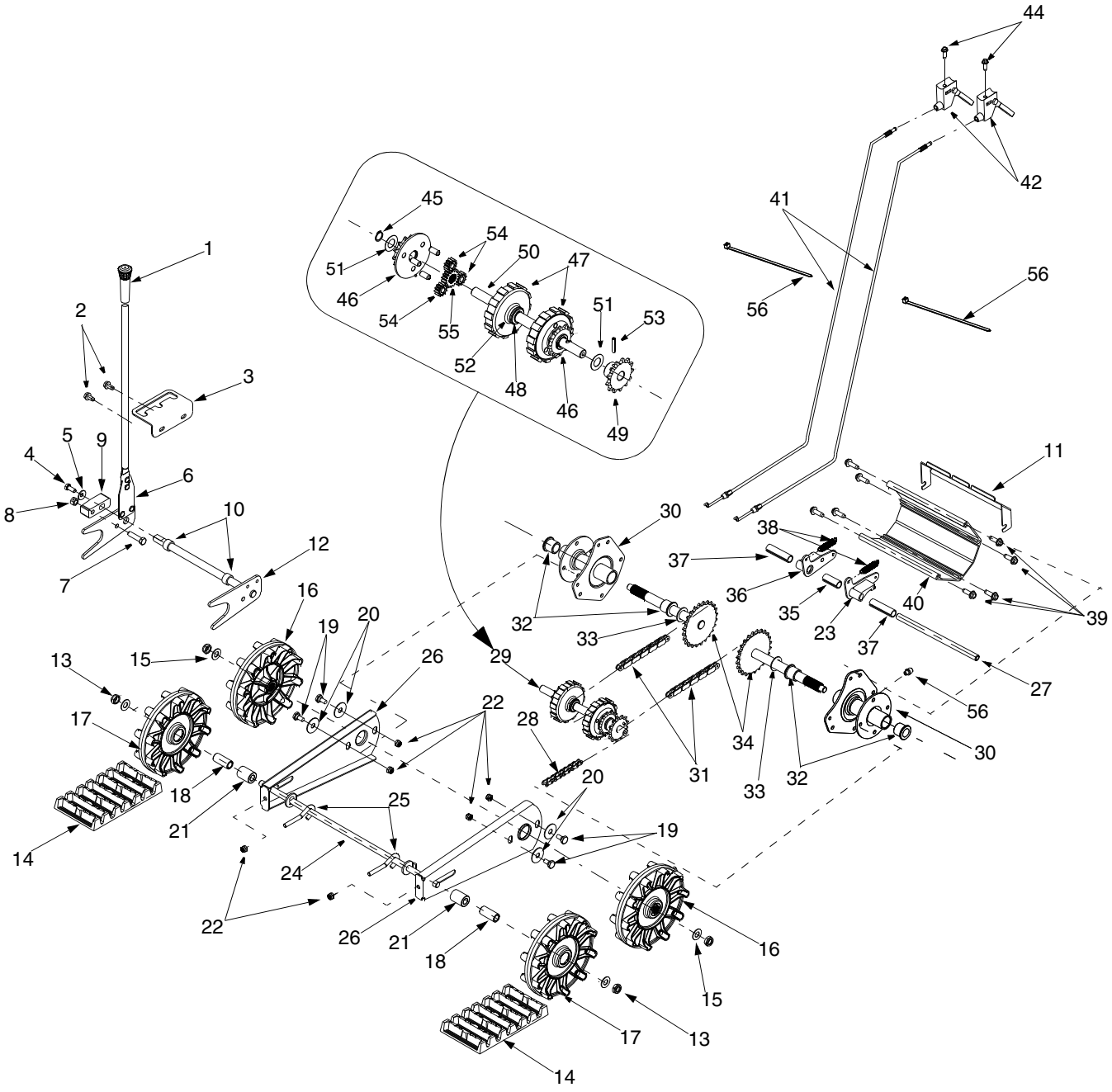
1
2
3
4
5
6
7
8
9
10
11
12
13
14
15
16
17
18
19
20
21
22
23
24
25
26
27
28
29
30
31
32
33
34
35
36
37
38
39
40
41
42
44
45
46
47
48
49
50
51
52
53
54
55
56

Model 7L3

Ref. No.	Part No.	Part Description
1.	720-0223	Grip
2.	710-0726	Tap Screw, 5/16-12 x.750
3.	784-5642	Track Lockout Plate
4.	710-0157	Hex Cap Screw, 5/16-24 x.75
5.	736-0242	Bell Washer
6.	684-0038	Track Lock Handle Assembly
7.	710-0459A	Hex Cap Screw, 3/8-24 x 1.5
8.	712-0214	Hex Nut, 3/8-24
9.	748-0353A	Lift Shaft Drive
10.	750-0547	Spacer
11.	784-5609	Steering Cable Bracket
12.	684-0009	Pivot Rod Assembly
13.	712-0346	Jam Nut, 1/2-20
14.	731-1292	Snow Track
15.	736-0272	Flat Washer
16.	731-1538A	Track Drive Wheel
17.	631-0032	Track Idler Wheel
18.	750-0995	Spacer
19.	738-0140	Screw,.435 x.178-5/16 x.56
20.	736-0406	Flat Washer
21.	750-0909	Spacer
22.	712-04063	Flange Lock Nut, 5/16-18
23.	618-0044	LH Dogg Assembly
24.	684-0024	Idler Axle Assembly
25.	710-1231	Eye Bolt
26.	784-5639	Track Side Plate
27.	711-0911	Actuator Shaft
28.	713-0233	Chain
29.	618-0169A	Track/Steering Shaft Assembly
30.	683-0024	Track Hub Assembly
31.	713-0437	Chain
32.	741-0339	Flange Bearing
33.	736-0287	Flat Washer
34.	611-0053	Axle Assembly
35.	750-0904	Spacer
36.	618-0043	RH Dogg Assembly
37.	750-0903	Spacer
38.	732-0209	Extension Spring
39.	710-0602	Tap Screw, 5/16-18 x 1
40.	719-0295A	Track Housing
41.	746-0948	Steering Cable
42.	746-0950A	Steering Trigger
44.	710-1233	Screw, #10-24 x 1.375
45.	716-0114	Retaining Ring
46.	618-0046B	Carrier Assembly
47.	717-1211B	Ring Gear
48.	716-0115	Retaining Ring
49.	713-0414	13-Tooth Sprocket
50.	711-0912	Track Steering Drive Shaft
51.	736-0502	Flat Washer
52.	736-0336	Flat Washer
53.	715-0120	Spiral Pin
54.	717-1209A	12-Tooth Gear
55.	717-1210A	18-Tooth Gear
56.	725-0157	Cable Tie

MANUFACTURER'S LIMITED WARRANTY FOR:

YARD-MAN™ by MTD®

The limited warranty set forth below is given by MTD LLC with respect to new merchandise purchased and used in the United States, its possessions and territories.

"MTD" warrants this product against defects in material and workmanship for a period of two (2) years commencing on the date of original purchase and will, at its option, repair or replace, free of charge, any part found to be defective in materials or workmanship. This limited warranty shall only apply if this product has been operated and maintained in accordance with the Operator's Manual furnished with the product, and has not been subject to misuse, abuse, commercial use, neglect, accident, improper maintenance, alteration, vandalism, theft, fire, water, or damage because of other peril or natural disaster. Damage resulting from the installation or use of any part, accessory or attachment not approved by MTD for use with the product(s) covered by this manual will void your warranty as to any resulting damage.

Normal wear parts are warranted to be free from defects in material and workmanship for a period of thirty (30) days from the date of purchase. Normal wear parts include, but not limited to items such as: batteries, belts, blades, blade adapters, grass bags, rider deck wheels, seats, snow thrower skid shoes, shave plates, auger spiral rubber and tires.

HOW TO OBTAIN SERVICE: Warranty service is available, WITH PROOF OF PURCHASE, through your local authorized service dealer. To locate the dealer in your area, check your Yellow Pages, or contact MTD LLC at P.O. Box 361131, Cleveland, Ohio 44136-0019, or call 1-800-800-7310 or log on to our Web site at www.mtdproducts.com.

This limited warranty does not provide coverage in the following cases:

a. The engine or component parts thereof. These items may carry a separate manufacturer's warranty. Refer to applicable manufacturer's warranty for terms and conditions.
b. Log splitter pumps, valves, and cylinders have a separate one year warranty.
c. Routine maintenance items such as lubricants, filters, blade sharpening, tune-ups, brake adjustments, clutch adjustments, deck adjustments, and normal deterioration of the exterior finish due to use or exposure.
d. Service completed by someone other than an authorized service dealer.
e. MTD does not extend any warranty for products sold or exported outside of the United States, its possessions and territories, except those sold through MTD's authorized channels of export distribution.
f. Replacement parts that are not genuine MTD parts.
g. Transportation charges and service calls.

No implied warranty, including any implied warranty of merchantability of fitness for a particular purpose, applies after the applicable period of express written warranty above as to the parts as identified. No other express warranty, whether written or oral, except as mentioned above, given by any person or entity, including a dealer or retailer, with respect to any product, shall bind MTD. During the period of the warranty, the exclusive remedy is repair or replacement of the product as set forth above.

The provisions as set forth in this warranty provide the sole and exclusive remedy arising from the sale. MTD shall not be liable for incidental or consequential loss or damage including, without limitation, expenses incurred for substitute or replacement lawn care services or for rental expenses to temporarily replace a warranted product.

Some states do not allow the exclusion or limitation of incidental or consequential damages, or limitations on how long an implied warranty lasts, so the above exclusions or limitations may not apply to you.

In no event shall recovery of any kind be greater than the amount of the purchase price of the product sold. **Alteration of safety features of the product shall void this warranty.** You assume the risk and liability for loss, damage, or injury to you and your property and/or to others and their property arising out of the misuse or inability to use the product.

This limited warranty shall not extend to anyone other than the original purchaser or to the person for whom it was purchased as a gift.

HOW STATE LAW RELATES TO THIS WARRANTY: This limited warranty gives you specific legal rights, and you may also have other rights which vary from state to state.

IMPORTANT: Owner must present Original Proof of Purchase to obtain warranty coverage.

MTD LLC, P.O. BOX 361131 CLEVELAND, OHIO 44136-0019; Phone: 1-800-800-7310